THE STATE OF TEXAS §

COUNTY OF CAMERON §

BE IT REMEMBERED on the 29th day of May 2025, there was conducted a Regular Meeting of the Cameron County Regional Mobility Authority, at the CCRMA Administrative Office, 3470 Carmen Avenue, Suite 5 thereof, in Rancho Viejo, Texas, for the purpose of transacting any and all business that may lawfully be brought before the same.

THE BOARD MET AT:

12:00 P.M.

PRESENT:

FRANK PARKER, JR.
CHAIRPERSON

MICHAEL SCAIEF
VICE CHAIRMAN (ABSENT)

ARTURO A. NELSON
SECRETARY

AL VILLARREAL
TREASURER

MARK ESPARZA
DIRECTOR

LEO R. GARZA
DIRECTOR

ALBERT GARZA, III
DIRECTOR (ABSENT)

The Meeting was called to order by Chairman Parker, at 12:00 P.M. At this time, the Board considered the following matters as per CCRMA Agenda posted on the CCRMA's website and physically at 3470 Carmen Avenue, Suite 5, Rancho Viejo, Texas, on this 23rd day of May 2025 at 8:05 A.M.

PUBLIC COMMENTS

1 PUBLIC COMMENTS

N/A

ACTION ITEMS

2-A Consideration and Approval of the April 24, 2025 Regular Meeting Minutes.

Secretary Nelson moved to approve the April 24, 2025, Regular Meeting Minutes. The motion was seconded by Director Esparza and carried unanimously.

2-B Acknowledgement of Claims.

Mr. Victor Barron, RMA Chief Financial Officer went over the Claims and presented them into the record.

Director Esparza moved to acknowledge the Claims as presented. The motion was seconded by Director Garza and carried unanimously.

The Claims are as follows:

2-C Approval of Claims.

Mr. Victor Barron, RMA Chief Financial Officer, went over the Claims and presented them into the record. Mr. Barron read in additional claims for the R.R.P. Consulting Engineers, LLC for Invoices #U2716.441-10 for the South Parallel Corridor in the amount of $35,060.73, Inv.# U2716.334-12 for the Flor de Mayo Project in the amount of $56,392.28 and Inv.# TX2434.WA2-02 for the Outer Parkway Project in the amount of $887,611.35. Bringing the total amount of the claims to $1,413,994.47. Staff recommended approval.

Director Esparza moved to approve the Claims as presented with the additional claims read in. The motion was seconded by Director Garza and carried unanimously.

The Claims are as follows:

2-D Consideration and Possible of the Financial Statements and Budget Amendments for the Month of April 2025.

Mr. Victor Barron, RMA Chief Financial Officer, went over the Financial Statement and Budget Amendments for the month of April 2025. Mrs. Janett Huerta, Toll Operations Administrator, went over the Toll Operation report for the month of April 2025.

Director Esparza moved to approve the Financial Statements and Budget Amendments for the month of April 2025. The motion was seconded by Director Garza and carried unanimously.

The Financials are as follows:

2-E Consideration and Approval of Payment of Invoices and Release of Checks to ZIWA Corporation for the Free Trade Bridge (Los Indios) Port of Entry Export Building Renovation Donation Acceptance Program Project.

No action required.

2-F Consideration and Approval of an Interlocal Agreement between the Cameron County Regional Mobility Authority and Cameron County regarding Gateway Bridge.

Mr. Pete Sepulveda, Jr., RMA Executive Director, advised the board of the need to approve an Interlocal Agreement between the Cameron County Regional Mobility Authority and Cameron County regarding Gateway Bridge. Mr. Sepulveda further advised that the interlocal agreement was for the Engineering and Architectural design of the County Administration Building, Toll Plaza and Pedestrian Bridge project. He also stated that the US Department of State deemed the Presidential Permit application for the Gateway Pedestrian Bridge complete and improvements for the Gateway Modernization project for the federal port of entry will begin in January of 2026. Staff recommended approval.

Secretary Nelson moved to approve an Interlocal Agreement between the Cameron County Regional Mobility Authority and Cameron County regarding Gateway Bridge. The motion was seconded by Treasurer Villarreal and carried unanimously.

The Interlocal Agreement is as follows:

2-G Consideration and Approval to Authorize Cameron County Regional Mobility Authority Staff to Issue a Work Authorization Solicitation to Cameron County Regional Mobility Authority GEC(s) for the Gateway Bridge Project to Include County Administration Building, Toll Plaza, Canopies, Pedestrian Bridge (s) and any other facilities required by Cameron County or Federal Agencies.

Mr. Pete Sepulveda, Jr., RMA Executive Director, advised the board of the need to approve Cameron County Regional Mobility Authority Staff to Issue a Work Authorization Soliciation to Cameron County Regional Mobility Authority GEC(s) for the Gateway Bridge Project to Include County Administration Building, Toll Plaza, Canopies, Pedestrian Bridge(s) and any other facilities required by Cameron County or Federal Agencies. Mr. Sepulveda further advised that this is part of the CCRMA's internal procurement process with the GEC's for recommendations. Staff recommended approval.

Director Esparza moved to approve to Authorize Cameron County Regional Mobility Authority Staff to Issue a Work Authorization Solicitation to Cameron County Regional Mobility Authority GEC(s) for the Gateway Bridge Project to Include County Building, Toll Plaza, Canopies, Pedestrian Bridge (s) and any other facilities required by Cameron County or Federal Agencies. The motion was seconded by Director Garza and carried unanimously.

2-H Consideration and Approval to Authorize Cameron County Regional Mobility Authority Staff to Issue a Work Authorization Solicitation to Cameron County Regional Mobility Authority GEC(s) for Appraisal Services, Appraisal Review and Title Services for the East Loop Project.

Mr. Pete Sepulveda, Jr. RMA Executive Director, advised the board of the need to approve Cameron County Regional Mobility Authority Staff to Issue a Work Authorization Solicitation to Cameron County Regional Mobility Authority GEC (s) for Appraisal Services, Appraisal Review and Title Services for the East Loop Project. Mr. Sepulveda stated that the design of the project is almost complete. He also mentioned that this procurement will be handled internally with CCRMA's GEC(s) to initiate the ROW acquisition process, utilizing local funds while adhering to federal requirements. Staff recommended approval.

Director Garza moved to approve to Authorize Cameron County Regional Mobility Authority Staff to Issue a Work Authorization Solicitation to Cameron County Regional Mobility Authority GEC(s) for Appraisal Services, Appraisal Review and Title Services for the East Loop Project. The motion was seconded by Secretary Nelson and carried unanimously.

2-I Consideration and Approval of a Public Highway Overpass Agreement between Cameron County Regional Mobility Authority and Union Pacific Railroad for Construction of Two New Grade Separated Structures for the SH 550 Gap II Project.

Mr. Eric Davila, RMA Chief Development Engineer, advised the board of the need to approve a Public Highway Overpass Agreement between the Cameron County Regional Mobility Authority and Union Pacific Railroad for Construction for Two New Grade Separated Structures for the SH 550 Gap II Project. Mr. Davila further advised that this Right-of-Way (ROW) agreement consists of two components, which is Exhibit B for the ROW Budget and Exhibit C for the Construction Management Oversite Budget. Mr. Pete Sepulveda, Jr., RMA Executive Director, further advised that in the agreement it states that if the project does not start within 6 months, they have the right to recalculate the cost. Staff recommended approval.

Director Garza moved to approve of a Public Highway Overpass Agreement between Cameron County Regional Mobility Authority and Union Pacific Railroad for the Construction of Two New Grade Separated Structures for the SH 550 Gap II Project. The motion was seconded by Director Esparza and carried unanimously.

The Agreement is as follows:

2-J Consideration and Authorization to Utilize Job Order Contract via Cooperative TIPS Purchasing Contract # 2401402 for the Demolition of Residential Doors and Replacement with Hollow Metal Doors and Frames with Badge Access to the Cameron County Regional Mobility Authority Toll Operations Building.

Mr. Alejandro Garza, RMA Construction Manager, advised the board of the need to Utilize Job Order Contract via Cooperative TIPS Purchasing Construct #2401402 for the Demolition of Residential Doors and Replacement with Hollow Metal Doors, and Frames with Badge Access to the Cameron County Regional Mobility Authority Toll Operations Building. Mr. Garcia further advised that the contract is with SpawGlass, which is a member of the TIPS Purchasing Cooperative. The total cost of the quote is $36,447.43 which includes the doors, electrical work, badge access, and mag locks. Mr. Pete Sepulveda, Jr., RMA Executive Director, advised the board that half of the cost is for the badge system and it is also to be done for TxDOT and HCTRA compliance purposes. Staff recommended approval.

Secretary Nelson moved to approve to Utilize Job Order Contract via Cooperative TIPS Purchasing Contract #2401402 for the Demolition of Residential Doors and Replacement with Hollow Metal Doors and Frames with Badge Access to the Cameron County Regional Mobility Authority Toll Operations Building. The motion was seconded by Director Esparza and carried unanimously.

The Contract is as follows:

2-K Consideration and Approval of Scope of Work with Harris County Toll Road Authority for CCRMA Management of Fuego Tag Inventory and Access to Odoo System Warehouse.

Mrs. Janett Huerta, RMA Toll Operations Administrator, advised the board of the need to approve the Scope of Work with Harris County Toll Road Authority for CCRMA Management of Fuego Tag Inventory and Access to Odoo System. Mrs. Huerta further advised that HCTRA currently manages all the tags in their system and assigns them to the Customer Service Representatives when requested. CCRMA must then wait until HCTRA issues out the tags. This Scope of Work allows CCRMA to keep control of our own inventory and distribute when needed without going through HCTRA. She also advised that this would be at no cost to the RMA. Staff recommended approval.

Director Esparza moved to approve of Scope of Work with Harris County Toll Road Authority for CCRMA Management of Fuego Tag Inventory and Access to Odoo System Warehouse. The motion was seconded by Treasurer Villarreal and carried unanimously.

2-L Consideration and Approval of Amendment No. 2 to Professional Engineering Consulting Services Agreement between the Cameron County Regional Mobility Authority and JWH & Associates for Engineering Services Related to the Update of the FM 511 Roadway Analysis.

Mr. Pete Sepulveda, Jr., RMA Executive Director, advised the board of the need to approve Amendment No. 2 to Professional Engineering Consulting Services Agreement between the Cameron County Regional Mobility Authority and JWH & Associates for Engineering Services Related to the Update of the FM 511 Roadway Analysis. Mr. Sepulveda further advised that a meeting was held with TxDOT to review recommendations and advised they could possibly do two out of the three recommendations in phases. He also advised that the final study will be completed next month. Staff recommended approval.

Director Garza moved to approve of Amendment No. 2 to Professional Engineering Consulting Services Agreement between the Cameron County Regional Mobility Authority and JWH & Associates for Engineering Services Related to the Update of the FM 511 Roadway Analysis. The motion was seconded by Secretary Nelson and carried unanimously.

The Amendment is as follows:

2-M Consideration and Approval of Change Order 1 to the Construction Contract between the Cameron County Regional Mobility Authority and Ziwa Corporation for the Los Indios Land Port of Entry Export Dock Renovation.

Mr. Pete Sepulveda, Jr., RMA Executive Director, advised the board of the need to approve Change Order 1 to the construction Contract between the Cameron County Regional Mobility Authority and ZIWA Corporation for the Los Indios Land Port of Entry Export Dock Renovation. Mr. Sepulveda further advised that this change order is to add thirty-five days due to a delay with material and an intercom system that CBP requested after construction started. Mr. Alejandro Garcia, RMA Construction Manager, advised that the project is about 75% complete. Staff recommended approval.

Director Esparza moved to approve Change Order 1 to the Construction Contract between the Cameron County Regional Mobility Authority and ZIWA Corporation for the Los Indios Land Port of Entry Export Dock Renovation. The motion was seconded by Director Garza and carried unanimously.

The Change Order is as follows:

ADJOURNMENT

There being no further business to come before the Board and upon motion by Director Esparza and seconded by Director Garza and carried unanimously, the meeting was **ADJOURNED** at 12:46 P.M.

APPROVED this 26th **day of** June **2025.**

CHAIRMAN FRANK PARKER, JR.

ATTESTED:

ARTURO A. NELSON, SECRETARY

IMPROVING MORE THAN JUST ROADS

POSTED TO WEB
05/23/2025
AT 8:05 AM

AGENDA
Regular Meeting of the Board of Directors
of the
Cameron County Regional Mobility Authority
3470 Carmen Avenue, Suite 5
Rancho Viejo, Texas 78575
May 29, 2025
12:00 PM

PUBLIC COMMENTS:

1. **Public Comments.**

ITEMS FOR DISCUSSION AND ACTION:

2. **Action Items.**

   A. **Consideration and Approval of the April 24, 2025, Regular Meeting Minutes.**

   B. **Acknowledgement of Claims.**

   C. **Approval of Claims.**

   D. **Consideration and Approval of the Financial Statements and Budget Amendments for the Month of April 2025.**

   E. **Consideration and Approval of Payment of Invoice and Release of Check to ZIWA Corporation for the Free Trade Bridge (Los Indios) Port of Entry Export Building Renovation Donation Acceptance Program Project.**

   F. **Consideration and Approval of an Interlocal Agreement between the Cameron County Regional Mobility Authority and Cameron County Regarding Gateway Bridge.**

   G. **Consideration and Approval to Authorize Cameron County Regional Mobility Authority Staff to Issue a Work Authorization Solicitation to Cameron County Regional Mobility Authority GEC(s) for the Gateway Bridge Project To Include County Administration Building, Toll Plaza, Canopies, Pedestrian Bridge (s) and any other facilities required by Cameron County or Federal Agencies.**

   H. **Consideration and Approval to Authorize Cameron County Regional Mobility Authority Staff to Issue a Work Authorization Solicitation to Cameron County Regional Mobility Authority GEC(s) for Appraisal Services, Appraisal Review and Title Services for the East Loop Project.**

I. **Consideration and Approval of a Public Highway Overpass Agreement between Cameron County Regional Mobility Authority and Union Pacific Railroad for Construction of Two New Grade Separated Structures for the SH 550 Gap II Project.**

J. **Consideration and Authorization to Utilize Job Order Contract via Cooperative TIPS Purchasing Contract# 2401402 for the Demolition of Residential Doors and Replacement with Hollow Metal Doors and Frames with Badge Access to the Cameron County Regional Mobility Authority Toll Operations Building.**

K. **Consideration and Approval of a Scope of Work with Harris County Toll Road Authority for CCRMA Management of Fuego Tag Inventory and Access to Odoo System Warehouse.**

L. **Consideration and Approval of Amendment No. 2 to Professional Engineering Consulting Services Agreement between the Cameron County Regional Mobility Authority and JWH & Associates for Engineering Services Relating to the Update of the FM 511 Roadway Analysis.**

M. **Consideration and Approval of Change Order No. 1 to the Construction Contract between the Cameron County Regional Mobility Authority and Ziwa Corporation for the Los Indios Land Port of Entry Export Dock Renovation.**

ADJOURNMENT:

Signed this 23rd day of May 2025

Frank Parker, Jr.
Chairman

NOTE:
Participation by Telephone Conference Call – One or more members of the CCRMA Board of Directors may participate in this meeting through a telephone conference call, as authorized by Sec. 370.262, Texas Transportation Code. Each part of the telephone conference call meeting that by law must be open to the public shall be audible to the public at the meeting location and will be recorded. On conclusion of the meeting, the recording will be made available to the public.

2-B ACKNOWLEDGEMENT OF CLAIMS.

Claims for Acknowledgement

CAMERON COUNTY REGIONAL MOBILITY AUTHORITY
Claims May 21, 2025

Operations

Vendor Name	Invoice Number	Cash Required	Invoice/Credit Description	PROJ Title	Transfer Funds	Funding Source	Bank Account
Alert Termite & Pest Control Co	10580	$ 55.00	Pest Control Admin/Tolls May 2025	Indirect	Y	Local	Ope
CDW Government LLC, CDW Government	AD9GI4H	152.82	Solarwinds Dameware Remote SUP	Indirect	Y	Local	Ope
CheckMark	119054 4/25	77.00	TimeClock Service April 2025	Indirect	Y	Local	Ope
Alejandro Garcia	Travel HG Apr 2025	352.80	Travel Reimbursement HG April 2025	Indirect	Y	Local	Ope
Gexa Energy, LP	29575628	81.71	Electricity Ste 6 May 2025	Indirect	Y	Local	Ope
NRG Energy, Inc	112018056554	83.55	Electricity Ste 8 May 2025	Indirect	Y	Local	Ope
Texas Comptroller of Public Accounts	K2017 FY2025	100.00	Texas SmartBuy Membership Program FY25	Indirect	Y	Local	Ope
		902.88					

Interlocal Agreement

Vendor Name	Invoice Number	Cash Required	Invoice/Credit Description	PROJ Title	Transfer Funds	Funding Source	Bank Account
Pathfinder Public Affairs, Inc	85-B	$ 10,000.00	Consulting Services ILA January 2025	CC - Consulting Services PF	Y	Local	Ope
Pathfinder Public Affairs, Inc	86-B	10,000.00	Consulting Services ILA February 2025	CC - Consulting Services PF	Y	Local	Ope
R.R.P. Consulting Engineers, L.L.C.	U3048-18	2,573.44	West Blvd APD March 2025	West Rail Corridor	Y	Local	Ope
		22,573.44					

Tolls

Vendor Name	Invoice Number	Cash Required	Invoice/Credit Description	PROJ Title	Transfer Funds	Funding Source	Bank Account
Alert Termite & Pest Control Co	10580	$ 55.00	Pest Control Admin/Tolls May 2025	Indirect	Y	Local	Tolls
Bernard's Electric, LLC	572706	3,330.00	Water Heater Replacement for	Indirect	Y	Local	Tolls
Harris County Toll Road Authority	CCRMA April 2025	200.00	Flat Service Fee Owed to HCTRA April 2025	Indirect	Y	Local	Tolls
Matus Contractor Company	886	6,325.00	Zone 1 Hwy 550 Debris and Jersey Barrier Maint	Indirect	Y	Local	Tolls
Matus Contractor Company	887	10,474.00	Grass, Garbage, Herbicide SH550 to Alton Gloor	Indirect	Y	Local	Tolls
Hugo Dante Salinas Jr	0191	405.00	SH550 Road Closure 5.13.25	Indirect	Y	Local	Tolls
Matthew T Walker	0190	405.00	SH550 Road Closure 5.13.25	Indirect	Y	Local	Tolls
Matthew T Walker	0192	495.00	SH550 Road Closure 5.14.25	Indirect	Y	Local	Tolls
Omar Lerma	0193	495.00	SH550 Road Closure 5.14.25	Indirect	Y	Local	Tolls
		22,184.00					

Operations	902.88
Interlocal Agree	22,573.44
Tolls	22,184.00
Total Transfer	45,660.32

Reviewed by:

Monica R. Ibarra, Accountant 5.21.25

Victor J. Barron, Chief Financial Officer 5.21.25

Pete Sepulveda Jr, Executive Director 5 21 25

CAMERON COUNTY REGIONAL MOBILITY AUTHORITY
Claims May 14, 2025

Operations

Vendor Name	Invoice Number	Cash Required	Invoice/Credit Description	PROJ Title	Transfer Funds	Funding Source	Bank Account
GDJ Engineering	2025-058	$ 9,009.62	MPO April 2025	Indirect	Y	Local	TRZ
PEDRO SEPULVEDA JR.	Travel PSJ 4.25	1,620.93	Travel Reimbursement PSJ April 2025	Indirect	Y	Local	Ope
Charter Communcations	185525901050125	774.06	Internet/Phones Admin-Tolls May 2025	Indirect	Y	Local	Ope
Union Pacific Railroad Company	90144312	2,224.79	Harligen Rail Improvments Dec 2024-Jan 2025	North Rail Relocation	Y	Local	TRZ
		13,629.40					

Interlocal Agreement

Vendor Name	Invoice Number	Cash Required	Invoice/Credit Description	PROJ Title	Transfer Funds	Funding Source	Bank Account
Union Pacific Railroad Company	90144312	$ 8,475.37	Harligen Rail Improvments Dec 2024-Jan 2025	North Rail Relocation	Y	Local	Ope
		8,475.37					

Tolls

Vendor Name	Invoice Number	Cash Required	Invoice/Credit Description	PROJ Title	Transfer Funds	Funding Source	Bank Account
Aflac	020960	$ 255.18	Employee Supplemental Insurance May 2025	Indirect	Y	Local	Tolls
Fagan Consulting LLC	BOS-2504	173.71	Back Office System Transition Support April 2025	Indirect	Y	Local	Tolls
Public Utilities Board	588837 5/25	174.58	Electricity 180042 SH 550 LOC May 2025	Port Spur - SH550	Y	Local	Tolls
SD Leroy Rincones	0185	78.75	SH550 Road Closures 4.30.25	Indirect	Y	Local	Tolls
Mario Gonzales	0184	78.75	SH550 Road Closure 4.30.25	Indirect	Y	Local	Tolls
Matthew T Walker	0187	405.00	SH550 Road Closure 5.6.25	Indirect	Y	Local	Tolls
Matthew T Walker	0188	427.50	SH550 Road Closure 5.7.25	Indirect	Y	Local	Tolls
Narcedalia Figueroa	0189	427.50	SH550 Road Closures 5.7.25	Indirect	Y	Local	Tolls
Charter Communcations	185399301050125	590.88	Ethernet Intrastate 2129 Fm 511 May 2025	Indirect	Y	Local	Tolls
Charter Communcations	185525901050125	774.06	Internet/Phones Admin-Tolls May 2025	Indirect	Y	Local	Tolls
Charter Communcations	239414901050125	590.88	Ethernet Instrastate 7301 Metropolis Dr May 2025	Indirect	Y	Local	Tolls
		3,976.79					

Operations	13,629.40
Interlocal Agree	8,475.37
Tolls	3,976.79
Total Transfer	26,081.56

Reviewed by:

Monica R. Ibarra, Accountant 5.14.25

Victor J. Barron, Chief Financial Officer 5.14.25

Pete Sepulveda Jr, Executive Director 5 15 25

CAMERON COUNTY REGIONAL MOBILITY AUTHORITY
Claims May 7, 2025

Operations

Vendor Name	Invoice Number	Cash Required	Invoice/Credit Description	PROJ Title	Transfer Funds	Funding Source	Bank Account
Amazon Capital Services	1VXR-3PFN-L1P1	$ 147.00	Office Supplies Admin/Tolls April 2025	Indirect	Y	Local	Ope
JWH and Associates, Inc.	825	2,000.00	Railroad Alternatives & Harlingen Yard April 2025	North Rail Relocation	Y	Local	TRZ
JWH and Associates, Inc.	826	3,962.61	Gateway Bridge Pedestrian April 2025	CC - Gateway Bridge	Y	Local	TRZ
MPark Consulting, LLC	6	750.00	Professional Service Agreement On-Call for CBP April 2025	Indirect	Y	Local	Ope
MPC Studios, Inc	35421	334.00	Website Hosting May 2025	Indirect	Y	Local	Ope
RingCentral, Inc.	CD_001103998	368.50	Phone System May 2025	Indirect	Y	Local	Ope
R.R.P. Consulting Engineers, L.L.C.	U2716.441-09	1,664.82	South Parallel Corridor WA 41 February 2025	South Parallel Corridor	Y	Local	TRZ
Staples	7003867285	52.84	Office Supplies Admin/Tolls April 2025	Indirect	Y	Local	Ope
Rentfro, Irwin, & Irwin, P.L.L.C	3023	2,230.62	Legal Services April 2025	Indirect	Y	Local	Ope
Union Pacific Railroad Company	90144720	1,962.17	Union Pacific SH550 Gap II Oct 2024-Jan 2025	SH550 GAP II	Y	Local	TRZ
Verizon Wireless	6111754141	75.98	Internet HotSpot April 2025	Indirect	Y	Local	Ope
Valley Municipal Utility District	2030007806 4/25	38.33	Water & Wastewater Ste 7 April 2025	Indirect	Y	Local	Ope
Valley Municipal Utility District	2030007907 4/25	37.29	Water & Wastewater Ste 6 April 2025	Indirect	Y	Local	Ope
Valley Municipal Utility District	2030008005 4/25	37.65	Water & Wastewater Ste 4 April 2025	Indirect	Y	Local	Ope
Valley Municipal Utility District	2030008105 4/25	37.15	Water & Wastewater Ste 3 April 2025	Indirect	Y	Local	Ope
Valley Municipal Utility District	2030008306 4/25	39.58	Water & Wastewater Ste 8 April 2025	Indirect	Y	Local	Ope
Valley Municipal Utility District	2030008406 4/25	36.76	Water & Wastewater Ste 5 April 2025	Indirect	Y	Local	Ope
		13,775.30					

Interlocal Agreement

Vendor Name	Invoice Number	Cash Required	Invoice/Credit Description	PROJ Title	Transfer Funds	Funding Source	Bank Account
GDJ Engineering	2025-044	$ 703.38	Dana Rd Proj March 2025	Dana Rd	Y	Local	Ope
GDJ Engineering	2025-044	6,438.03	Dana Rd Proj March 2025	Dana Rd	Y	Local	Restri
Pathfinder Public Affairs, Inc	87-B	10,000.00	Consulting Services ILA March 2025	CC - Consulting Services PF	Y	Local	Ope
R.R.P. Consulting Engineers, L.L.C.	U2716.441-09	9,118.97	South Parallel Corridor WA 41 February 2025	South Parallel Corridor	Y	Local	Ope
		26,260.38					

Tolls

Vendor Name	Invoice Number	Cash Required	Invoice/Credit Description	PROJ Title	Transfer Funds	Funding Source	Bank Account
Amazon Capital Services	1VXR-3PFN-L1P1	$ 144.76	Office Supplies Admin/Tolls April 2025	Indirect	Y	Local	Tolls
LexisNexis Risk Solutions FL Inc	1100135585	123.94	Address and Name Lookup April 2025	Indirect	Y	Local	Tolls
NSA Property Holdings LLC d/b/a Move It Storage-Los Fresnos	Unit #923 5/25	374.00	Storage Unit# 923 May 2025	Indirect	Y	Local	Tolls
Prisciliano Delgado	10635	250.00	Lawn Care April 2025	Indirect	Y	Local	Tolls
RingCentral, Inc.	CD_001103998	368.49	Phone System May 2025	Indirect	Y	Local	Tolls
Staples	7003867285	38.32	Office Supplies Admin/Tolls April 2025	Indirect	Y	Local	Tolls
Rentfro, Irwin, & Irwin, P.L.L.C	3023	2,069.38	Legal Services April 2025	Indirect	Y	Local	Tolls
United States Postal Service	FC Stamps 5.5.25	730.00	First Class Stamps 1000 Qty	Indirect	Y	Local	Tolls
Verizon Wireless	6111754141	75.98	Internet HotSpot April 2025	Indirect	Y	Local	Tolls
Valley Municipal Utility District	3010066802 4/25	56.01	Water & Wastewater Tolls April 2025	Indirect	Y	Local	Tolls
		4,230.88					

Operations	13,775.30
Interlocal Agree	26,260.38
Tolls	4,230.88
Total Transfer	44,266.56

Reviewed by:

Monica R. Ibarra, Accountant — 5.7.25

Victor J. Barron, Chief Financial Officer — 5.7.25

Pete Sepulveda Jr, Executive Director — 5.9.25

CAMERON COUNTY REGIONAL MOBILITY AUTHORITY
Claims May 1, 2025

Operations

Vendor Name	Invoice Number	Cash Required	Invoice/Credit Description	PROJ Title	Transfer Funds	Funding Source	Bank Account
Allegra Print & Imaging	161025	$ 90.00	Business Cards CSR, Mary & Victor & Rack Cards	Indirect	Y	Local	Ope
Culligan of the Rio Grande Valley	320895 4/25	26.97	Bottled Water April 2025	Indirect	Y	Local	Ope
Diamante Super Clean	34	850.00	Janitorial Services April 2025	Indirect	Y	Local	Ope
Direct Energy Business, LLC	251110056790379	43.71	Electricity Ste 7 April 2025	Indirect	Y	Local	Ope
Direct Energy Business, LLC	251110056790380	116.59	Electricity Ste 3 April 2025	Indirect	Y	Local	Ope
Direct Energy Business, LLC	251110056790381	60.09	Electricity Ste 4 April 2025	Indirect	Y	Local	Ope
Direct Energy Business, LLC	251120056796179	16.77	Electricity Ste 5 April 2025	Indirect	Y	Local	Ope
Lily Anne Garcia	Reimb LGF Apr 2025	30.73	Travel & Misc Reimbursement LGF April 2025	Indirect	Y	Local	Ope
Monica R Ibarra	Travel MRI 4/25	36.89	Travel Reimbursement MRI April 2025	Indirect	Y	Local	Ope
Government Finance Officers Association	00024358	460.00	Certificate of Achievement Review Fee FY2024	Indirect	Y	Local	Ope
PEDRO SEPULVEDA JR.	Travel PSJ 4.28.25	731.65	Travel Reimbursement PSJ State of Legislators	Indirect	Y	Local	Ope
Republic Services	0863-002721939	144.64	Waste Container May 2025	Indirect	Y	Local	Ope
		2,608.04					

Tolls

Vendor Name	Invoice Number	Cash Required	Invoice/Credit Description	PROJ Title	Transfer Funds	Funding Source	Bank Account
Allegra Print & Imaging	161025	$ 370.21	Business Cards CSR, Mary & Victor & Rack Cards	Indirect	Y	Local	Tolls
Bernard's Electric, LLC	472785	2,980.00	Replacement of ducts and vents for A/C at Tolls	Indirect	Y	Local	Tolls
Bernard's Electric, LLC	472786	2,370.00	Breaker box was replaced, wiring for A/C was changed	Indirect	Y	Local	Tolls
Culligan of the Rio Grande Valley	320895 4/25	57.95	Bottled Water April 2025	Indirect	Y	Local	Tolls
Direct Energy Business, LLC	251120056796180	336.93	Electricity Tolls April 2025	Indirect	Y	Local	Tolls
Direct Energy Business, LLC	251140056813796	213.99	Electricity 570 Fm 511 April 2025	Direct Connectors - SH550	Y	Local	Tolls
Direct Energy Business, LLC	251140056813797	382.92	Electricity 1895 Fm 511 #1 April 2025	FM1847 - SH550	Y	Local	Tolls
Direct Energy Business, LLC	251140056815332	116.01	Electricity 1705 Fm 511 April 2025	Direct Connectors - SH550	Y	Local	Tolls
Direct Energy Business, LLC	251150056824424	153.10	Electricity 1505 Fm 511 April 2025	Direct Connectors - SH550	Y	Local	Tolls
Discount Granite Fabrications LLC	1619	750.00	Office Desk Countertop Modification Tolls Office	Indirect	Y	Local	Tolls
Lily Anne Garcia	Reimb LGF Apr 2025	68.60	Travel & Misc Reimbursement LGF April 2025	Indirect	Y	Local	Tolls
Monica R Ibarra	Travel MRI 4/25	19.32	Travel Reimbursement MRI April 2025	Indirect	Y	Local	Tolls
iCheckU Drug and Alcohol Testing Services	1004	120.00	Background Check for AA & BA	Indirect	Y	Local	Tolls
Public Utilities Board	600710 4/25	192.60	Electricity 1100 Fm 511 Hwy Apr 2025	Direct Connectors - SH550	Y	Local	Tolls
Mario Gonzales	0182	225.00	SH550 Road Closure 4.25.25	Indirect	Y	Local	Tolls
Michaela Zuniga	0183	225.00	SH550 Road Closure 4.25.25	Indirect	Y	Local	Tolls
		8,581.63					

Operations	2,608.04
Tolls	8,581.63
Total Transfer	11,189.67

Reviewed by:

Monica R. Ibarra, Accountant 5.1.25

Victor J. Barron, Chief Financial Officer 5.1.25

Pete Sepulveda Jr, Executive Director 5/25

CAMERON COUNTY REGIONAL MOBILITY AUTHORITY
Claims April 24, 2025

Operations

Vendor Name	Invoice Number	Cash Required	Invoice/Credit Description	PROJ Title	Transfer Funds	Funding Source	Bank Account
Alert Termite & Pest Control Co	10577	$ 55.00	Pest Control Admin/Tolls April 2025	Indirect	Y	Local	Ope
American Express	AMEX April 2025	4,667.28	Credit Card Charges April 2025	Indirect	Y	Local	Ope
Burton McCumber & Longoria, LLP	01159746	8,500.00	Financial Statement Audit FY2024	Indirect	Y	Local	Ope
Gexa Energy, LP	29092136	60.49	Electricity Ste 6 Apr 2025	Indirect	Y	Local	Ope
NRG Energy, Inc	302006641038	69.04	Electricity Ste 8 April 2025	Indirect	Y	Local	Ope
Pathfinder Public Affairs, Inc	87	15,000.00	Consulting Services March 2025	Indirect	Y	Local	Ope
Toshiba Financial Services	553887308	273.90	Printer Admin May 2025	Indirect	Y	Local	Ope
		28,625.71					

Tolls

Vendor Name	Invoice Number	Cash Required	Invoice/Credit Description	PROJ Title	Transfer Funds	Funding Source	Bank Account
Alert Termite & Pest Control Co	10577	$ 55.00	Pest Control Admin/Tolls April 2025	Indirect	Y	Local	Tolls
American Express	AMEX April 2025	108.81	Credit Card Charges April 2025	Indirect	Y	Local	Tolls
Mary Chapa	Reim MC 4.12.25	49.71	Travel & Misc Reimbursement MC 4.12.25	Indirect	Y	Local	Tolls
FRANCISCO J SANMIGUEL	Travel CC Jan 25	507.50	Travel Reimbursement CC FSM Jan 2025	Indirect	Y	Local	Tolls
FRANCISCO J SANMIGUEL	Travel CC Nov-Dec 24	1,108.18	Travel Reimbursement CC FSM Nov-Dec 2024	Indirect	Y	Local	Tolls
Jose De Jesus Rocha Acosta	JR 4.22.25	4,242.47	Trade Expos in Mexico City April 1-4th	Indirect	Y	Local	Tolls
Matus Contractor Company	878	750.00	Asphalt Liter Clean Up Hwy550	Indirect	Y	Local	Tolls
Edwardo Leos	0180	450.00	SH550 Road Closure 4.8.25	Indirect	Y	Local	Tolls
		7,271.67					

Operations	28,625.71
Tolls	7,271.67
Total Transfer	35,897.38

Reviewed by:

Monica R. Ibarra, Accountant — 4.24.25

Victor J. Barron, Chief Financial Officer — 4.24.25

Pete Sepulveda Jr, Executive Director — 4.25.25

2-C APPROVAL OF CLAIMS.

CAMERON COUNTY REGIONAL MOBILITY AUTHORITY
BOD Claims May 29, 2025

Operations

Vendor Name	Invoice Number		Cash Required	Invoice/Credit Description	PROJ Title	Transfer Funds	Funding Source	Bank Account
Texas County District Retirement System	TCDRS Apr-May 2025	$	17,690.05	TCDRS April - May 2025	Indirect	Y	Local	Ope
TML Health Benefits Pool	PCAMERO62506		12,969.42	Employee Health Benefits June 2025	Indirect	Y	Local	Ope
			30,659.47					

Interlocal Agreement

Vendor Name	Invoice Number		Cash Required	Invoice/Credit Description	PROJ Title	Transfer Funds	Funding Source	Bank Account
GDJ Engineering	2025-060	$	36,990.08	Dana Rd Proj April 2025	Dana Rd	Y	Local	Restri
RRP Consulting Engineers, LLC	U2716.230-11		48,316.99	FM 509 APD WA 32 April 2025	Fm 509	Y	Local	Ope
RRP Consulting Engineers, LLC	U2716.331-08		92,410.54	Whipple Rd WA 31 April 2025	Whipple Rd	Y	Local	Restri
Ziwa Corporation	Pay App No 4		149,400.50	Los Indios Dock Renovation April 2025	CC - Los Indios	Y	Local	Restri
			327,118.11					

Tolls

Vendor Name	Invoice Number		Cash Required	Invoice/Credit Description	PROJ Title	Transfer Funds	Funding Source	Bank Account
Harris County Toll Road Authority	CCRMA April 2025	$	30,000.00	CCRMA Flat Service Fee Owed to HCTRA	Indirect	Y	Local	Tolls
Kapsch TrafficCom USA, Inc	486026SI00280		22,520.70	Toll System Maintenance Support Apr 2025	Indirect	Y	Local	Tolls
Texas County District Retirement System	TCDRS Apr-May 2025		7,939.03	TCDRS April - May 2025	Indirect	Y	Local	Tolls
TML Health Benefits Pool	PCAMERO62506		16,692.80	Employee Health Benefits June 2025	Indirect	Y	Local	Tolls
			77,152.53					

Operations	$	30,659.47
Interlocal Agree		327,118.11
Tolls		77,152.53
Total Transfer	$	434,930.11

Reviewed by:

Victor J. Barron,
Chief Financial Officer

5.22.25

Pete Sepulveda Jr,
Executive Director

Pete Sepulveda, Jr. 05.22.25

2-D CONSIDERATION AND APPROVAL OF THE FINANCIAL STATEMENTS AND BUDGET AMENDMENTS FOR THE MONTH OF APRIL 2025.

CAMERON COUNTY REGIONAL MOBILITY AUTHORITY

April 2025 Financial Report

PETE SEPULVEDA, JR., EXECUTIVE DIRECTOR

VICTOR J. BARRON, CHIEF FINANCIAL OFFICER

RMA
CAMERON COUNTY REGIONAL
MOBILITY AUTHORITY

Administrative Operations Revenues and Expenses Current Period

- Total operating revenues Current Period Actual decreased 7.43% compared to Prior Year Current Period Actual.
- Total operating income Current Period Actual decreased (13.26)% compared to Prior Year Current Period
- Current Period Actual Net Position $295,534.

CAMERON COUNTY REGIONAL MOBILITY AUTHORITY
Statement of Revenues and Expenses - Monthly R&E - Unposted Transactions Included In Report From 4/1/2025 Through 4/30/2025

	Current Period Actual	Prior Year Current Period Actual	Current Period % Change
Operating Revenues			
Vehicle registration fees	$ 360,600	$ 341,610	5.56
Interlocal agreements	13,000	61,985	(79.03)
Total Operating Revenues	373,600	403,595	(7.43)
Operating Expenses			
Personnel costs	89,966	80,537	11.71
Professional services	26,481	26,075	1.56
Advertising & marketing	2,834	315	799.68
Data processing	5,363	5,771	(7.07)
Dues & memberships	10,460	6,110	71.19
Education & training	-	199	(100.00)
Fiscal agent fees	-	3,015	(100.00)
Insurance	743	3,112	(76.11)
Maintenance & repairs	1,052	965	9.00
Office supplies	480	11,562	(95.85)
Leases	-	311	(100.00)
Travel	6,335	2,957	114.24
Utilities	1,839	2,153	(14.55)
Contingency	9,000	7,980	12.78
Total Operating Expenses	154,554	151,061	2.31
Total Operating Income (Loss)	219,046	252,534	(13.26)
Non Operating Revenues			
Interest income	128,373	85,419	50.29
Total Non Operating Revenues	128,373	85,419	50.29
Non Operating Expenses			
Project expenses	51,885	184,549	(71.89)
Total Non Operating Expenses	51,885	184,549	(71.89)
Total Changes in Net Position	$ 295,534	$ 153,404	92.65

Unaudited Financial Statements Subject to Change

Administrative Operations Revenues and Expenses Year-to-Date Budget Performance

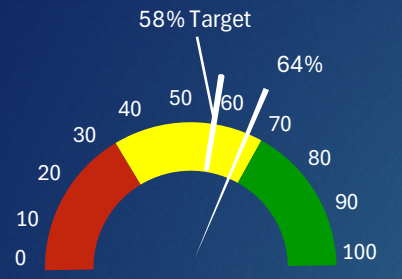

Vehicle Registration Fees
= 64% of budget recognized

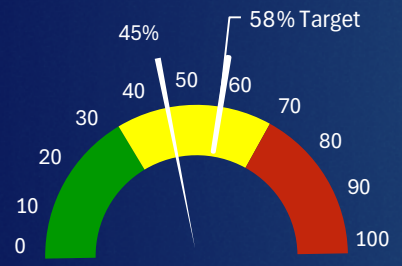

Personnel cost
= 45% of budget recognized

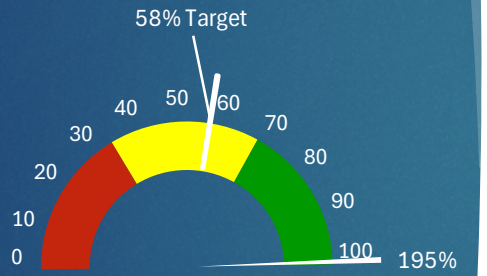

Interest Income
= 195% of budget recognized

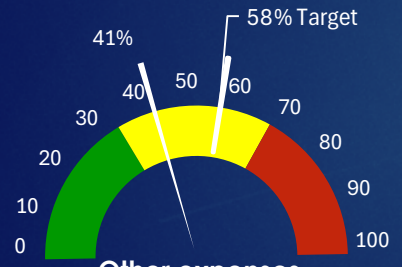

Other expenses
= 41% of budget recognized

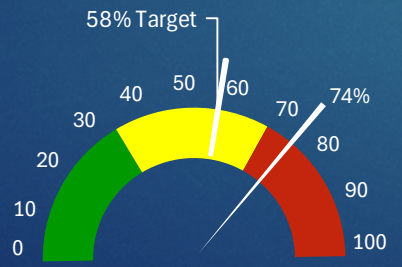

Debt Service
= 74% of budget recognized

***CCRMA's target utilization for April 2025 is 58% of the original budget**

CAMERON COUNTY REGIONAL MOBILITY AUTHORITY
Statement of Revenues and Expenses - Monthly R&E - Unposted Transactions Included
In Report From 4/1/2025 Through 4/30/2025

	Current Year Actual	Prior Year Actual	Original Budget	Annual Budget Variance - Original	Current Year % Change
Operating Revenues					
Vehicle registration fees	$ 2,216,575	$ 2,043,690	$ 3,490,000	$ (1,273,425)	8.46
Interlocal agreements	91,000	139,985	425,700	(334,700)	(34.99)
Other revenues	-	4,188	-	-	(100.00)
Total Operating Revenues	2,307,575	2,187,864	3,915,700	(1,608,125)	5.47
Operating Expenses					
Personnel costs	695,949	672,783	1,532,424	836,475	3.44
Professional services	167,219	155,355	284,000	116,781	7.64
Advertising & marketing	44,481	13,236	62,000	17,519	236.06
Data processing	31,896	24,677	40,000	8,104	29.25
Dues & memberships	17,755	25,000	30,000	12,245	(28.98)
Education & training	240	199	10,000	9,760	20.60
Fiscal agent fees	3,090	8,980	52,590	49,500	(65.59)
Insurance	5,740	3,508	9,300	3,560	63.62
Maintenance & repairs	8,242	8,123	85,000	76,758	1.46
Office supplies	11,836	20,294	46,050	34,214	(41.68)
Leases	1,913	26,509	2,870	957	(92.78)
Travel	20,216	21,595	30,000	9,784	(6.38)
Utilities	14,859	15,674	34,150	19,291	(5.20)
Contingency	9,279	37,980	131,491	122,212	(75.57)
Total Operating Expenses	1,032,715	1,033,914	2,349,875	1,317,160	(0.12)
Total Operating Income (Loss)	1,274,860	1,153,949	1,565,825	(290,965)	10.48
Non Operating Revenues					
Interest income	828,931	587,895	425,000	403,931	41.00
TRZ revenue	-	-	9,000,000	(9,000,000)	-
Total Non Operating Revenues	828,931	587,895	9,425,000	(8,596,069)	41.00
Non Operating Expenses					
Debt principal and interest	1,455,072	1,431,497	1,965,825	510,753	1.65
Debt interest-LOC	-	-	25,000	25,000	-
Project expenses	757,842	755,173	9,000,000	8,242,158	0.35
Total Non Operating Expenses	2,212,914	2,186,669	10,990,825	8,777,911	1.20
Total Changes in Net Position	$ (109,123)	$ (444,825)	$ -	$ (109,123)	(75.47)

Unaudited Financial Statements Subject to Change

Toll Operation Revenues and Expenses Current Period

- Total toll operating revenues Current Period Actual decreased 5.15% compared to Prior Year Current Period
- Total operating income Current Period Actual increased 8.06% compared to Prior Year Current Period
- Current Period Actual Net Position $352,660

CAMERON COUNTY REGIONAL MOBILITY AUTHORITY

Toll Operations Revenues Expenses - Cash - Toll Operations Revenues Expenses - Cash - Unposted Transactions Included In Report From 4/1/2025 Through 4/30/2025

	Current Period Actual	Prior Year Current Period Actual	Current Period % Change
Toll Operating Revenues			
Pay-By-Mail	$ 342,004	$ 326,820	4.65
Fuego Revenues	86,661	85,768	1.04
Interop Revenues			
Interop revenues	123,547	126,726	(2.51)
Bridge interoperability	-	35,954	(100.00)
Total Interop Revenues	123,547	162,680	(24.06)
Other Toll Revenues			
Interlocal agreement revenues	4,949	12,167	(59.32)
Total Other Toll Revenues	4,949	12,167	(59.32)
Total Toll Operating Revenues	557,160	587,435	(5.15)
Toll Operating Expenses			
Personnel costs	63,450	54,192	17.08
Transaction processing costs	32,149	104,388	(69.20)
Roadside maintnenace	80,198	55,095	45.56
CSC indirect/overhead costs	28,702	47,406	(39.45)
Total Toll Operating Expenses	204,500	261,081	(21.67)
Total Operating Income (Loss)	352,660	326,354	8.06
Changes in Net Position	$ 352,660	$ 326,354	8.06

Unaudited Financial Statements Subject to Change

Toll Operation Revenues and Expenses Year-to-Date Budget Performance

Toll Operating =67% of budget recognized

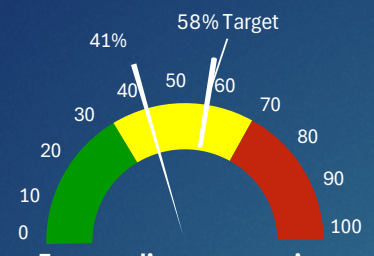

Transaction processing = 41% of budget recognized

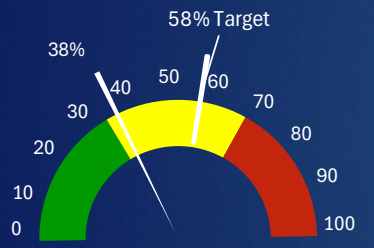

Personnel Cost = 38% of budget recognized

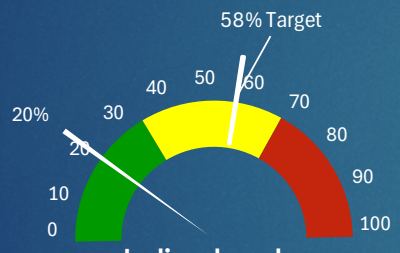

Indirect costs = 20% of budget recognized

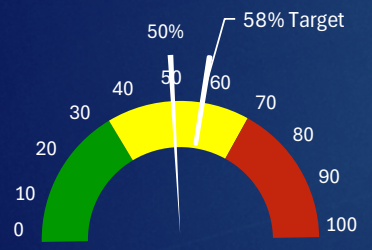

Roadside maintenance = 50% of budget recognized

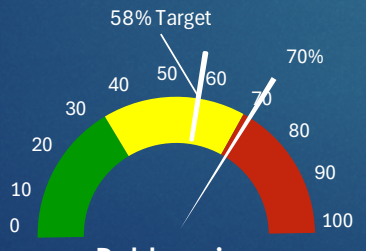

Debt service = 70% to budget recognized

***CCRMA's target utilization for April 2025 is 58% of the original budget**

CAMERON COUNTY REGIONAL MOBILITY AUTHORITY

Toll Operations Revenues Expenses - Cash - Toll Operations Revenues Expenses - Cash - Unposted Transactions Included In Report From 4/1/2025 Through 4/30/2025

	Current Year Actual	Prior Year Actual	Original Budget	Annual Budget Variance - Original	Current Year % Change
Toll Operating Revenues					
Pay-By-Mail	$ 2,142,699	$ 2,177,943	$ 3,250,000	$ (1,107,301)	(1.62)
Fuego Revenues	573,674	462,889	750,000	(176,326)	23.93
Interop Revenues					
Interop revenues	811,682	793,252	1,295,000	(483,318)	2.32
Bridge interoperability	-	286,415	-	-	(100.00)
Total Interop Revenues	811,682	1,079,667	1,295,000	(483,318)	(24.82)
Other Toll Revenues					
Interlocal agreement revenues	25,725	87,953	43,600	(17,875)	(70.75)
Total Other Toll Revenues	25,725	87,953	43,600	(17,875)	(70.75)
Total Toll Operating Revenues	3,553,779	3,808,451	5,338,600	(1,784,821)	(6.69)
Toll Operating Expenses					
Personnel costs	448,134	395,250	1,164,685	716,551	13.38
Transaction processing costs	243,208	669,594	595,000	351,792	(63.68)
Roadside maintenace	360,314	310,643	716,100	355,786	15.99
CSC indirect/overhead costs	225,057	179,245	1,117,034	891,977	25.56
Total Toll Operating Expenses	1,276,712	1,554,731	3,592,819	2,316,107	(17.88)
Total Operating Income (Loss)	2,277,067	2,253,720	1,745,781	531,286	1.04
Non Operating Revenues					
Other Financing Sources					
Pass through grant revenues	-	-	1,385,000	(1,385,000)	-
Total Other Financing Sources	-	-	1,385,000	(1,385,000)	-
Total Non Operating Revenues	-	-	1,385,000	(1,385,000)	-
Non Operating Expenses					
Debt principal and interest	2,192,692	2,032,010	3,130,781	938,089	7.91
Total Non Operating Expenses	2,192,692	2,032,010	3,130,781	938,089	7.91
Changes in Net Position	$ 84,375	$ 221,710	$ -	$ 84,375	(61.94)

Unaudited Financial Statements Subject to Change

Combined Revenues and Expenses

- Total operating revenues Current Year Actual decreased 2.25% compared to Prior Year Current Year
- Operating expenses in line with budget
- Total net change from operations increased 4.23% compared to Prior Year Current Year
- Current Year Actual Net Position $(24,748).

CAMERON COUNTY REGIONAL MOBILITY AUTHORITY
Combined Statement of Revenues and Expenses - Unposted Transactions Included
In Report From 4/1/2025 Through 4/30/2025

	Current Period Actual	Current Year Actual	Original Budget	Annual Budget Variance - Original	Prior Year Actual	Current Year % Change
Operating Revenues						
Vehicle registration fees	$ 360,600	$ 2,216,575	$ 3,490,000	$ (1,273,425)	$ 2,043,690	8.46
Interlocal agreement	17,949	116,725	469,300	(352,575)	232,126	(49.71)
Toll revenues	552,211	3,528,054	5,295,000	(1,766,946)	3,720,498	(5.17)
Total Operating Revenues	930,760	5,861,354	9,254,300	(3,392,946)	5,996,314	(2.25)
Operating Expenses						
Personnel costs	153,416	1,144,083	2,697,109	1,553,026	1,068,033	7.12
Accounting software and services	-	-	10,000	10,000	-	-
Professional services	24,250	141,233	214,000	72,767	120,027	17.67
Contractual services	4,300	33,285	95,000	61,715	109,596	(69.63)
Advertising & marketing	7,223	88,865	312,000	223,135	66,643	33.34
Data processing	5,363	31,896	40,000	8,104	24,677	29.25
Dues & memberships	17,388	24,683	42,000	17,317	31,910	(22.65)
Education & training	-	539	20,000	19,461	199	170.85
Fiscal agent fees	-	3,090	57,790	54,700	8,980	(65.59)
Insurance	28,655	98,720	117,900	19,180	79,547	24.10
Maintenance & repairs	11,757	30,866	210,000	179,134	16,923	82.39
Office supplies	1,359	25,509	183,550	158,041	249,289	(89.77)
Road maintenance	79,489	458,413	910,000	451,587	494,942	(7.38)
Leases	374	4,425	37,370	32,945	55,089	(91.97)
Toll services	2,149	30,775	230,000	199,225	117,500	(73.81)
Travel	8,398	30,092	80,000	49,908	35,090	(14.24)
Utilities	5,934	43,288	108,442	65,154	39,550	9.45
Contingency	9,000	119,665	577,533	457,868	70,651	69.38
Total Operating Expenses	359,054	2,309,427	5,942,694	3,633,267	2,588,645	(10.79)
Net Change from Operations	571,706	3,551,927	3,311,606	240,321	3,407,669	4.23
Non Operating Revenue						
Pass through grant revenues	-	-	1,385,000	(1,385,000)	-	-
Interest income	128,373	828,931	425,000	403,931	587,895	41.00
TRZ Revenue	-	-	9,000,000	(9,000,000)	-	-
Total Non Operating Revenue	128,373	828,931	10,810,000	(9,981,069)	587,895	41.00
Non Operating Expenses						
Bond Debt Expense	-	3,647,764	5,096,606	1,448,842	3,463,507	5.32
Debt Interest - LOC	-	-	25,000	25,000	-	-
Project expenses	51,885	757,842	9,000,000	8,242,158	755,173	0.35
Total Non Operating Expenses	51,885	4,405,605	14,121,606	9,716,001	4,218,679	4.43
Changes in Net Position	$ 648,193	$ (24,748)	$ -	$ (24,748)	$ (223,114)	(88.91)

Unaudited Financial Statements Subject to Change

Interlocal Revenues and Expenses – Monthly

CAMERON COUNTY REGIONAL MOBILITY AUTHORITY
Statement of Revenues and Expenses
From 4/1/2025 Through 4/30/2025

	Cameron County	City of San Benito	Military Highway Water Supply Corporation	Total
Interlocal Revenues				
West Rail Corridor	$ 18,334	$ -	$ -	$ 18,334
Stenger Rd TASA	-	46,522	-	46,522
281 Connector	-	-	78,869	78,869
Dana Rd	7,141	-	-	7,141
CC - Los Indios	49,875	-	-	49,875
CC - Consulting Services PF	10,000	-	-	10,000
Total Interlocal Revenues	85,350	46,522	78,869	210,742
Interlocal Expenses				
West Rail Corridor	18,334	-	-	18,334
Stenger Rd TASA	-	46,522	-	46,522
281 Connector	-	-	78,869	78,869
Dana Rd	7,141	-	-	7,141
CC - Los Indios	49,875	-	-	49,875
CC - Consulting Services PF	10,000	-	-	10,000
Total Interlocal Expenses	85,350	46,522	78,869	210,742
Total Changes in Net Position	$ -	$ -	$ -	$ -

Unaudited Financial Statements Subject to Change

Interlocal Revenues and Expenses – Year-to-Date

CAMERON COUNTY REGIONAL MOBILITY AUTHORITY
Statement of Revenues and Expenses
From 10/1/2024 Through 4/30/2025

	Cameron County	City of Brownsville	City of San Benito	City of Los Fresnos	Federal Funds	Military Highway Water Supply Corporation	Total
Interlocal Revenues							
West Rail Corridor	$ 133,034	$ -	$ -	$ -	$ -	$ -	$ 133,034
SH 32 (East Loop)	17,201	98,988	-	-	-	-	116,189
South Parallel Corridor	187,521	-	-	-	-	-	187,521
Whipple Road	-	-	-	149,481	-	-	149,481
COLF Hike & Bike Trail Project	-	-	-	4,625	-	-	4,625
Stenger Rd TASA	-	-	60,488	-	-	-	60,488
FM 509	16,237	-	-	-	-	-	16,237
North Rail Relocation	-	-	-	-	83,857	-	83,857
281 Connector	67,925	-	-	-	-	1,003,208	1,071,133
Flor De Mayo Bridge	57,744	-	-	-	-	-	57,744
Dana Rd	210,070	68,297	-	-	-	-	278,366
CC - Old Alice Road	10,669	-	-	-	-	-	10,669
CC - Los Indios	207,050	-	-	-	-	-	207,050
CC - Consulting Services PF	54,000	-	-	-	-	-	54,000
Total Interlocal Revenues	961,450	167,284	60,488	154,106	83,857	1,003,208	2,430,394
Interlocal Expenses							
West Rail Corridor	133,034	-	-	-	-	-	133,034
SH 32 (East Loop)	17,201	98,988	-	-	-	-	116,189
South Parallel Corridor	187,521	-	-	-	-	-	187,521
Whipple Road	-	-	-	149,481	-	-	149,481
COLF Hike & Bike Trail Project	-	-	-	4,625	-	-	4,625
Stenger Rd TASA	-	-	60,488	-	-	-	60,488
FM 509	16,237	-	-	-	-	-	16,237
North Rail Relocation	-	-	-	-	83,857	-	83,857
281 Connector	67,925	-	-	-	-	1,003,208	1,071,133
Flor De Mayo Bridge	57,744	-	-	-	-	-	57,744
Dana Rd	210,070	68,297	-	-	-	-	278,366
CC - Old Alice Road	10,669	-	-	-	-	-	10,669
CC - Los Indios	207,050	-	-	-	-	-	207,050
CC - Consulting Services PF	54,000	-	-	-	-	-	54,000
Total Interlocal Expenses	961,450	167,284	60,488	154,106	83,857	1,003,208	2,430,394
Total Changes in Net Position	$ -	$ -	$ -	$ -	$ -	$ -	$ -

Unaudited Financial Statements Subject to Change

Balance Sheet

CAMERON COUNTY REGIONAL MOBILITY AUTHORITY
Balance Sheet
As of 4/30/2025

	Current Year
ASSETS	
Current Assets:	
Cash and cash equivalents	$ 9,039,530
Restricted cash - projects	8,639,630
Restricted cash accounts - debt service	6,060,516
Restricted cash - bond proceeds	1,632,284
Restricted cash - Transportation Reinvestment Zone (TRZ)- South Padre Island	5,000,000
Restricted cash - Transportation Reinvestment Zone (TRZ)- East Loop	3,752,766
Restricted cash - Transportation Reinvestment Zone (TRZ)- Outer Parkway	2,000,000
Restricted cash - Transportation Reinvestment Zone (TRZ)- US 281 Connector	1,000,000
Restricted cash - Transportation Reinvestment Zone (TRZ)- Whipple Road	997,358
Restricted cash - Transportation Reinvestment Zone (TRZ)- Other Projects	3,085,844
Accounts receivable, net	
Vehicle Registration Fees - Receivable	814,970
Other	4,330,600
Total Accounts receivable, net	5,145,570
Accounts receivable - other agencies	2,476,437
Prepaid expenses	36,262
Total Current Assets:	48,866,195
Non Current Assets:	
Capital assets, net	90,283,999
Capital projects in progress	20,568,813
Unamortized bond prepaid costs	80,602
Net pension asset	289,629
Total Non Current Assets:	111,223,042
Deferred Outflow of Resources	
Deferred outlflow related to pension	235,270
Total ASSETS	160,324,507
LIABILITIES	
Current Liabilities	
Accounts payable	1,339,724
Unearned revenue	8,327,039
Total Current Liabilities	9,666,762
Non Current Liabilities	
Due to other agencies	13,084,420
Long term bond payable	70,015,066
Total Non Current Liabilities	83,099,487
Deferred Inflows of Resources	
Deferred inflows related to pension	188,050
Total LIABILITIES	92,954,299
NET POSITION	
Beginning net position	
	63,578,810
Total Beginning net position	63,578,810
Changes in net position	
	3,791,399
Total Changes in net position	3,791,399
Total NET POSITION	67,370,208
TOTAL LIABILITIES, DEFERRED INFLOWS AND NET POSITION	$ 160,324,507

Unaudited Financial Statements Subject to Change

Statement of Cash Flows

CAMERON COUNTY REGIONAL MOBILITY AUTHORITY
Statement of Cash Flows
As of 4/30/2025

	Current Period	Current Year
Cash Flows from Operating Activities		
Receipts from vehicle registration fees	$ 298,120	$ 2,231,450
Receipts from toll revenues	576,796	3,818,297
Receipts from other operating revenues	17,949	116,725
Payments to vendors	(389,499)	(1,328,180)
Payments to employees	(153,511)	(1,158,945)
Total Cash Flows from Operating Activities	349,856	3,679,347
Cash Flows from Capital and Related Financing Activities		
Acquisitions of property and equipment	-	(165,796)
Acquisitions of construction in progress	(81,058)	(1,362,060)
Payments on principal and interest	-	(3,945,351)
Payment on interlocal project expenses	(252,626)	(3,134,235)
Advances and Interlocal project proceeds	168,205	7,264,960
Total Cash Flows from Capital and Related Financing Activities	(165,479)	(1,342,484)
Cash Flows from Investing Activities		
Receipts from interest income	128,373	828,931
Total Cash Flows from Investing Activities	128,373	828,931
Beginning Cash & Cash Equivalents	40,895,177	38,042,132
Ending Cash & Cash Equivalents	$ 41,207,926	$ 41,207,926

Unaudited Financial Statements Subject to Change

CAMERON COUNTY REGIONAL MOBILITY AUTHORITY

April 2025 Toll Operations Report

RMA
CAMERON COUNTY REGIONAL
MOBILITY AUTHORITY

FUEGO
WE'RE GOING PLACES. FAST.

JANETT HUERTA
TOLL OPERATIONS ADMINISTRATOR

Year to Year Traffic Comparison

17% Increase from April 2024

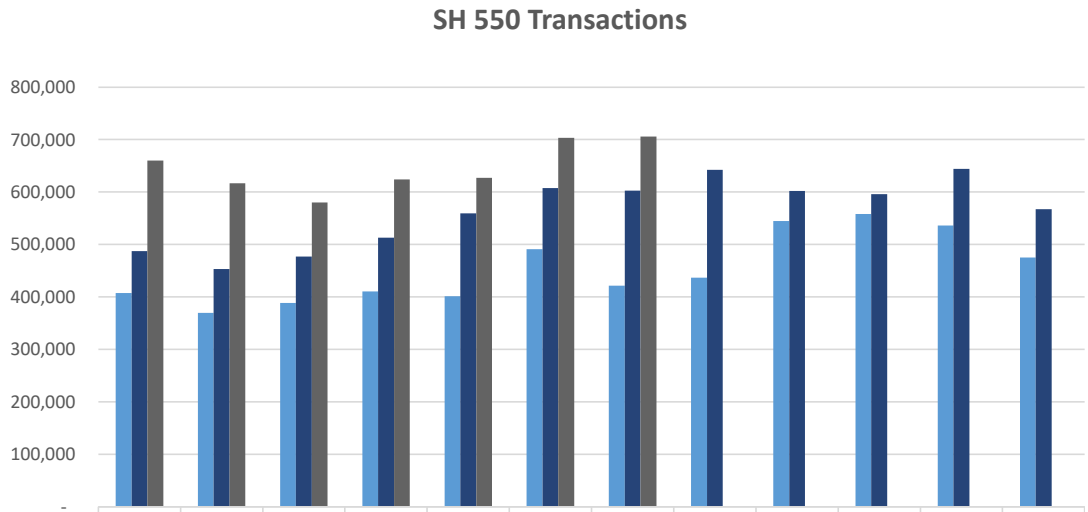

	Oct	Nov	Dec	Jan	Feb	Mar	Apr	May	Jun	Jul	Aug	Sep
FY 2023	407,026	369,421	388,354	410,139	400,933	490,568	421,245	436,752	544,309	557,872	535,749	474,883
FY2024	486,952	452,885	476,534	512,727	559,342	607,430	602,444	642,231	602,155	595,761	644,295	566,994
FY2025	660,125	616,775	579,652	624,043	627,009	703,146	705,380					

FY Year Total	
FY 2023	5,437,251
FY 2024	6,749,750
FY 2025*	4,516,130
***Through April**	

Tag Penetration
April 2025

Agency	Transaction Count	Projected Revenue
FUEGO	114,647	$ 86,660.60
HCTRA & TxTag	160,131	$ 107,815.98
NTTA	19,495	$ 19,319.00
KTA	695	$ 556.00
PIKEPASS	2,258	$ 2,659.50
BANKPASS	299	$ 150.00
E470	157	$ 120.50
FTE	320	$ 208.50
Total	298,002	$ 217,490.08

Valid Tag Penetration
42%

Image Review Overview

FY 2025	
Month	**Total**
October	447,413
November	442,935
December	406,275
January	440,153
February	459,578
March	516,014
April	500,760
May	
June	
July	
August	
September	
Total Images Processed	**3,213,128**

Code Off Report April 2025

Breakdown - Reason Codes	Gantries				
	Direct Connecto	FM1847	Old Alice	Port Spur	Total
Blurred Plate	625	1,808	155	4,802	7,390
DMV Mismatch	21	31	1	19	72
No Image				117	117
No Plate	1,586	1,777	230	2,213	5,806
No Vehicle	55	50	3	9	117
Partial Plate	407	471	182	2,150	3,210
Plate Obstruction	1,311	1,702	171	2,322	5,506
Too Bright	22	35	26	113	196
Too Dark				18	18
Unknown State	40	44	4	42	130
Total per Plaza	4,067	5,918	772	11,805	**22,562**

3% Code Off Rate

Payment Form	OCT	NOV	DEC	JAN	FEB	MAR	APR	MAY	JUN	JUL	AUG	SEP
Bank	$3,517.44	$8,773.48	$23,021.03	$11,854.73	$11,891.04	$18,289.42	$14,775.77					
Cash	$1,467.48	$7,394.28	$3,464.08	$2,724.96	$5,791.57	$3,567.54	$4,671.82					
Check/Money Order	$9,035.64	$10,157.82	$2,481.00	$8,414.06	$7,062.19	$11,365.87	$5,641.66					
CreditCard/DebitCard	$166,466.35	$231,212.48	$229,993.10	$263,858.95	$317,730.05	$420,235.00	$393,864.00					
Total Amount	***$180,486.91***	***$ 257,538.06***	***$258,959.21***	***$ 286,852.70***	***$ 342,474.85***	***$ 453,457.83***	***$ 418,953.25***	***$ -***	***$ -***	***$ -***	***$ -***	***$ -***
											YTD	**$2,198,722.81**
Daily Average	$5,822.16	$ 8,584.60	$ 8,353.52	$ 9,253.31	$ 12,231.24	$ 14,627.67	$ 13,965.11	$ -	$ -	$ -	$ -	$ -

FY 2025
Payment Processing

550 TOLL

FY 2025
Mail Report

Month	Toll Bill	First Notice	Second Notice	Final Notice	Total
October	24,868	100	100	100	25,168
November	24,296	10,406	8,994	9,367	53,063
December	25,512	7,151	5,248	5,000	42,911
January	28,026	7,780	8,795	3,577	48,178
February	26,343	13,363	10,491	7,730	57,927
March	26,292	10,515	7,934	8,247	52,988
April	27,514	12,168	11,629	9,275	60,586
May					-
June					-
July					-
August					-
September					-
Total	182,851	61,483	53,191	43,296	340,821

FY 2025
CSR Monthly Call Report

CSR Name	October	November	December	January	February	March	April	May	June	July	August	September	Total
Barbara	827	839	899	602	1,261	1,615	1,268						7,311
Itzel	482	632	746	428	986	878	374						4,526
Robert	1,131	634	754	1,276	787	497	1,188						6,267
Shelby	880	626	558	873	796	320	44						4,097
Angelica				669	1,387	562	1,185						3,803
Nadia			396	1,148	580	1,145	185						3,454
Veronica					44	1,182	83						1,309
Esmeralda						639	114						753
													-
Juan	493	495	293	443	254	303	295						2,576
Jose Luis	383	279	271	238	90	268	160						1,689
Evelyn	154	480	278										
Albert						639							639
Total Answered Calls	4,350	3,985	4,195	5,677	6,185	8,048	4,896	-	-	-	-	-	37,336
Missed Calls	166	252	301	340	934	307	1229						3,529
Totals Calls Received	4,516	4,237	4,496	6,017	7,119	8,355	6,125	-	-	-	-	-	40,865
% Missed	4%	6%	7%	6%	13%	4%	25%						9%

FY 2025 Fuego Accounts Registered

CSR	October	November	December	January	February	March	April	May	June	July	August	September	Total/per person
Barbara	20	13	18	29	28	27	46						181
Robert	14	23	26	11	22	14	24						134
Itzel	12	5	10	22	22	13	23						107
Nadia			4	18	30	27	20						99
Angelica				6	11	31	15						63
Esmeralda													0
													0
													0
													0
Juan	5	4	6	13	6	6	2						42
Jose Luis	8	6	1	10	3	3	1						32
													0
Evelyn	0	19	15										34
Veronica					3	7	1						11
Albert						2							2
Shelby	8	18	15	14	15	18	0						88
													0
Total FUEGO Accts Opened by CSR	67	88	95	123	140	148	132						793
Total FUEGO Accts Opened	130	172	191	236	259	274	258						1520
Enrollment % in Office	52%	51%	50%	52%	54%	54%	51%						52%

CSC Activity
April 2025

April 2025 Exempt Activity

Reason	Txn Count	Total Amounts	%
Disabled Veterans	17,024	$ 10,591.07	2%
Non-Revenue	6,977	$ 4,353.96	1%
Plate Corrections	91	$ 91.47	0%

MONTH	Settlements	Amount Paid	Enrollments
OCTOBER	**2**	$ 624.72	**0**
NOVEMBER	5	$ 1,872.44	1
DECEMBER	11	$ 1,792.54	5
JANUARY	8	$ 4,025.41	4
FEBRUARY	20	$ 8,075.24	12
MARCH	10	$ 2,616.06	2
APRIL	13	$ 4,870.94	4
MAY			
JUNE			
JULY			
AUGUST			
SEPTEMBER			
FISCAL YEAR TOTALS:	**69**	**$ 23,877.35**	**28**

RMA
CAMERON COUNTY REGIONAL
MOBILITY AUTHORITY

FUEGO
WE'RE GOING PLACES. FAST.

550
TOLL

Community Outreach
April 2025

2-E CONSIDERATION AND APPROVAL OF PAYMENT OF INVOICE AND RELEASE OF CHECK TO ZIWA CORPORATION FOR THE FREE TRADE BRIDGE (LOS INDIOS) PORT OF ENTRY EXPORT BUILDING RENOVATION DONATION ACCEPTANCE PROGRAM PROJECT.

No Action Taken

2-F CONSIDERATION AND APPROVAL OF AN INTERLOCAL AGREEMENT BETWEEN THE CAMERON COUNTY REGIONAL MOBILITY AUTHORITY AND CAMERON COUNTY REGARDING GATEWAY BRIDGE.

STATE OF TEXAS)(
)(
CAMERON COUNTY)(

INTERLOCAL COOPERATION AGREEMENT

THIS INTERLOCAL COOPERATION AGREEMENT is entered into and between the CAMERON COUNTY REGIONAL MOBILITY AUTHORITY, hereinafter referred to as "CCRMA" and CAMERON COUNTY, hereinafter referred to as "COUNTY", pursuant to V.T.C.A., Government Code, and Chapter 791, whereby:

1. PURPOSE OF INTERLOCAL COOPERATIVE AGREEMENT: To allow the CCRMA, to perform engineering and design services for the Gateway International Bridge County Administration Building and Toll Plaza, hereinafter referred to as the "Project"

2. PROJECT TO BE COMPLETED: To provide engineering and design services for the Gateway International Bridge County Administration Building and Toll Plaza Project.

3. CCRMA HEREBY AGREES TO:

   a. Subject to receiving the funding described in Section 4, utilize one of the CCRMA's consultants to perform engineering and design services for the Gateway International Bridge County Administration Building, Toll Plaza and other related Facilities as well as providing engineering services for a new pedestrian bridge at Gateway connecting the United States to Mexico.
   b. Provide monthly progress reports of activities to the COUNTY.
   c. Coordinate with Mexican Federal, State and Local agencies, including but not limited to ANAM, CAPUFE, Secretaria de Relaciones Exteriores (SRE), Secretaria de Communicaciones, Infraestructura y Transportes (SICT).
   d. Coordinate with Customs and Border Protections (CBP) and U.S. General Services Administration (GSA) and the GSA General Contractor.
   e. Coordination with IBWC, Coast Guard and other pertinent U.S. Federal agencies.
   f. Coordinate with CBP and GSA the construction of the new federal facility.
   g. Locally let the Gateway County Administration Building, Toll Plaza and related Facilities Project through the CCRMA utilizing CCRMA staff and consultants.

4. COUNTY HEREBY AGREES TO:

   a. To provide funding to the CCRMA once a Work Authorization has been executed between the CCRMA and their GEC for engineering and design services to cover the projects listed above.
   b. Enter into any necessary Agreements with CBP and GSA for the new federal facility.

5. It is specifically understood and agreed that in the event insufficient funds are appropriated and/or budgeted concerning the obligations under this Interlocal Cooperation Agreement on behalf of either of the Parties, then the Party with the insufficient funds shall notify the other Parties and this Interlocal Cooperation Agreement shall thereafter terminate and be null and void on the last day of the fiscal period for which appropriations were made without penalty, liability or expense to the Party.

6. Any payment made by the COUNTY will be made from current revenues and/or bond proceeds of the COUNTY.

7. This Interlocal Cooperation Agreement constitutes a one-time Agreement between the Parties and does not constitute a continuing Agreement for the CCRMA and COUNTY. The Interlocal Cooperation

Agreement expires when the Projects are completed or a 30-day termination notice is given by either CCRMA or COUNTY.

8. The Rules, Regulations and Orders of the CCRMA shall govern this Interlocal Cooperation Agreement and the Parties agree that the CCRMA shall supervise the performance of this Interlocal Cooperation Agreement. It is also agreed that the CCRMA has the authority to employee personnel to engage in other administrative or governmental functions and services necessary to fulfill the terms of this Agreement.

9. The CCRMA and COUNTY hereby find that the foregoing goods and governmental functions and services are reasonably required for the Project and this Interlocal Agreement includes an agreement between the CCRMA and COUNTY pursuant to Tex. Gov't CODE Section 791.025 to the extent applicable.

10. This Interlocal Cooperation Agreement shall have no legal force or effect until such time as it is properly Adopted and Approved by the CAMERON COUNTY REGIONAL MOBILITY AUTHORITY BOARD OF DIRECTORS and the CAMERON COUNTY COMMISSIONERS COURT.

Executed on this 20 day of May, 2025.

Attested by: _____
Arturo A. Nelson
CCRMA Secretary

_____
Frank Parker, Jr.
CCRMA Chairman

Attested by: _____
Sylvia Garza Perez
County Clerk

_____
Eddie Trevino, Jr.
County Judge

COMMISSIONER'S COURT
CAMERON COUNTY, TEXAS

2-G CONSIDERATION AND APPROVAL TO AUTHORIZE CAMERON COUNTY REGIONAL MOBILITY AUTHORITY STAFF TO ISSUE A WORK AUTHORIZATION SOLICITATION TO CAMERON COUNTY REGIONAL MOBILITY AUTHORITY GEC(s) FOR THE GATEWAY BRIDGE PROJECT TO INCLUDE COUNTY ADMINISTRATION BUILDING, TOLL PLAZA, CANOPIES, PEDESTRIAN BRIDGE(s) AND ANY OTHER FACILITIES REQUIRED BY CAMERON COUNTY OR FEDERAL AGENCIES.

MEMORANDUM

To: **Board of Directors**

From: **Pete Sepulveda, Jr., Executive Director** PSJ

Date: **May 29, 2025**

Subj: **Item 2G- Consideration and Approval to Authorize Cameron County Regional Mobility Staff to Issue a Work Authorization Solicitation to Cameron County Regional Mobility Authority GEC(s) for the Gateway Bridge Project to Include County Administration Building, Toll Plaza, Canopies, Pedestrian Bridge (s) and any other facilities required by Cameron County or Federal Agencies.**

CCRMA staff have determined the need to issue a Work Authorization Solicitation to Cameron County Regional Mobility Authority GEC(s) for the Gateway Bridge Project to Include County Administration Building, Toll Plaza, Canopies, Pedestrian Bridge (s) and any other facilities required by Cameron County or Federal Agencies, thus staff are requesting approval to proceed.

2-H CONSIDERATION AND APPROVAL TO AUTHORIZE CAMERON COUNTY REGIONAL MOBILITY AUTHORITY STAFF TO ISSUE A WORK AUTHORIZATION SOLICITATION TO CAMERON COUNTY REGIONAL MOBILITY AUTHORITY GEC(S) FOR APPRAISAL SERVICES, APPRAISAL REVIEW AND TITLE SERVICES FOR THE EAST LOOP PROJECT.

IMPROVING MORE THAN JUST ROADS

M E M O R A N D U M

To: **Board of Directors**

From: **Pete Sepulveda, Jr., Executive Director** PSJ

Date: **May 29, 2025**

Subj: **Item 2H- Consideration and Approval to Authorize Cameron County Regional Mobility Staff to Issue a Work Authorization Solicitation to Cameron County Regional Mobility Authority GEC(s) for Appraisal Services, Appraisal Review and Title Services for the East Loop Project.**

CCRMA staff have determined the need to issue a Work Authorization Solicitation to Cameron County Regional Mobility Authority GEC(s) for Appraisal Services, Appraisal Review and Title Services for the East Loop Project, thus staff are requesting approval to proceed.

2-I CONSIDERATION AND APPROVAL OF A PUBLIC HIGHWAY OVERPASS AGREEMENT BETWEEN CAMERON COUNTY REGIONAL MOBILITY AUTHORITY AND UNION PACIFIC RAILROAD FOR CONSTRUCTION OF A TWO NEW GRADE SEPERATED STRUCTURES FOR THE SH 550 GAP II PROJECT.

Docusign Envelope ID: D24B0E46-A040-4DCF-9159-2076E4A3664D

UP Real Estate Project No.: 0773787

PUBLIC HIGHWAY OVERPASS AGREEMENT

FM 550
DOT 978234G & 978233A
1.601 & 1.619 – Palo Alto Industrial Lead
Brownsville, Cameron County, Texas

THIS AGREEMENT ("Agreement") is made and entered into as of the 23 day of June, 20 25 ("Effective Date"), by and between **UNION PACIFIC RAILROAD COMPANY**, a Delaware corporation, to be addressed at Real Estate Department, 1400 Douglas Street, Mail Stop 1690, Omaha, Nebraska 68179 ("Railroad") and **CAMERON COUNTY REGIONAL MOBILITY AUTHORITY**, a municipal corporation or political subdivision of the State of Texas to be addressed at 3451 Carmen Avenue, Rancho Viejo, Texas 78575 ("Political Body"),

RECITALS:

The Political Body desires to undertake as its project (the "Project") the construction of two new grade separated overpass structures (the "Structures") that will carry vehicular traffic traversing on FM 550 over Railroad's track(s) at Railroad's Milepost 1.601 and 1.619, DOT Number 978234G and 978233A on Railroad's Palo Alto Industrial Lead at or near Brownsville, Cameron County, Texas (the "Crossing Area"). The Crossing Area is shown on the print marked **Exhibit A** and the Political Body's type, size and location prints of the Structures marked **Exhibit A-1,** attached hereto and hereby made a part hereof.

The Railroad and the Political Body are entering into this Agreement to cover the above.

AGREEMENT:

NOW, THEREFORE, it is mutually agreed by and between the parties hereto as follows:

Section 1. EXHIBITS B AND D

The general terms and conditions marked **Exhibit B,** and the Railroad's Coordination Requirements marked **Exhibit D,** are attached hereto and hereby made a part hereof.

Docusign Envelope ID: D24B0E46-A040-4DCF-9159-2076E4A3664D

Section 2. RAILROAD GRANTS RIGHT

For and in consideration of the sum of **One Hundred Seventy-Six Thousand Six Hundred Seventy-Five Dollars ($176,675.00)** to be paid by the Political Body to the Railroad upon the execution and delivery of this Agreement and in further consideration of the Political Body's agreement to perform and comply with the terms of this Agreement, the Railroad hereby grants to the Political Body the right to construct, maintain and repair the Structures over and across the Crossing Area.

Section 3. DEFINITION OF CONTRACTOR

For purposes of this Agreement the term "Contractor" shall mean the contractor or contractors hired by the Political Body to perform any Project work on any portion of the Railroad's property and shall also include the Contractor's subcontractors and the Contractor's and subcontractor's respective employees, officers and agents, and others acting under its or their authority.

Section 4. CONTRACTOR'S RIGHT OF ENTRY AGREEMENT - INSURANCE

A. Prior to Contractor performing any work within the Crossing Area involving the Project, and any subsequent maintenance or repair work, the Political Body shall require the Contractor to:

- execute the Railroad's then current Contractor's Right of Entry Agreement
- obtain the then current insurance required in the Contractor's Right of Entry Agreement; and
- provide such insurance policies, certificates, binders and/or endorsements to the Railroad.

B. The Railroad's current Contractor's Right of Entry Agreement is marked **Exhibit E**, attached hereto and hereby made a part hereof. The Political Body confirms that it will inform its Contractor that it is required to execute such form of agreement and obtain the required insurance before commencing any work on any Railroad property. Under no circumstances will the Contractor be allowed on the Railroad's property without first executing the Railroad's Contractor's Right of Entry Agreement and obtaining the insurance set forth therein and also providing to the Railroad the insurance policies, binders, certificates and/or endorsements described therein.

C. All insurance correspondence, binders, policies, certificates and/or endorsements shall be sent to:

Manager - Contracts
Union Pacific Railroad Company
Real Estate Department
1400 Douglas Street, Mail Stop 1690

Docusign Envelope ID: D24B0E46-A040-4DCF-9159-2076E4A3664D

Omaha, NE 68179-1690
UP Project No. 0773787

D. If the Political Body's own employees will be performing any of the Project work, the Political Body may self-insure all or a portion of the insurance coverage subject to the Railroad's prior review and approval.

Section 5. FEDERAL AID POLICY GUIDE

If the Political Body will be receiving any federal funding for the Project the current rules, regulations and provisions of the Federal Aid Policy Guide as contained in 23 CFR 140, Subpart I and 23 CFR 646, Subparts A and B are incorporated into this Agreement by reference.

Section 6. NO PROJECT EXPENSES TO BE BORNE BY RAILROAD

The Political Body agrees that no Project costs and expenses are to be borne by the Railroad. In addition, the Railroad is not required to contribute any funding for the Project.

Section 7. WORK TO BE PERFORMED BY RAILROAD; BILLING SENT TO POLITICAL BODY; POLITICAL BODY'S PAYMENT OF BILLS

A. The work to be performed by the Railroad, at the Political Body's sole cost and expense, is described in the Railroad's Material and Force Account Estimate dated April 11, 2024, marked **Exhibit C**, attached hereto and hereby made a part hereof (the "Estimate"). As set forth in the Estimate, the Railroad's estimated cost for the Railroad's work associated with the Project is **Three Hundred Fifty Thousand Dollars ($350,000.00).**

B. The Railroad, if it so elects, may recalculate and update the Estimate submitted to the Political Body in the event the Political Body does not commence construction on the portion of the Project located on the Railroad’s property within six (6) months from the date of the Estimate.

C. The Political Body acknowledges that the Estimate does not include any estimate of flagging or other protective service costs that are to be paid by the Political Body or the Contractor in connection with flagging or other protective services provided by the Railroad in connection with the Project. All of such costs incurred by the Railroad are to be paid by the Political Body or the Contractor as determined by the Railroad and the Political Body. If it is determined that the Railroad will be billing the Contractor directly for such costs, the Political Body agrees that it will pay the Railroad for any flagging costs that have not been paid by any Contractor within thirty (30) days of the Contractor's receipt of billing.

D. The Railroad shall send progressive billing to the Political Body during the Project, and final billing to the Political Body within three hundred sixty-five (365) days after

Docusign Envelope ID: D24B0E46-A040-4DCF-9159-2076E4A3664D

receiving written notice from the Political Body that all Project work affecting the Railroad's property has been completed and the Railroad Representative named in **Exhibit D** has closed the Project work order and notified the Political Body.

E. The Political Body agrees to reimburse the Railroad within thirty (30) days of its receipt of billing from the Railroad for one hundred percent (100%) of all actual costs incurred by the Railroad in connection with the Project including, but not limited to, all actual costs of engineering review (including preliminary engineering review costs incurred by Railroad prior to the Effective Date of this Agreement), construction, inspection, flagging (unless flagging costs are to be billed directly to the Contractor), procurement of materials, equipment rental, manpower and deliveries to the job site and all direct and indirect overhead labor/construction costs including Railroad's standard additive rates.

Section 8. PLANS

A. The Political Body, at its expense, shall prepare, or cause to be prepared by others, the detailed plans and specifications for the Project and the Structures and submit such plans and specifications to the Railroad's Assistant Vice President Engineering-Design, or his authorized representative, for prior review and approval. The plans and specifications shall include all appurtenances, associated drainage, shoring, sheeting and excavations for bents and/or abutments next to or adjacent to the Railroad's tracks and, if applicable, all demolition and removal plans for the existing structure.

B. The final one hundred percent (100%) completed plans that are approved in writing by the Railroad's Assistant Vice President Engineering-Design, or his authorized representative, are hereinafter referred to as the "Plans". The Plans are hereby made a part of this Agreement by reference.

C. No changes in the Plans shall be made unless the Railroad has consented to such changes in writing.

D. Upon completion of the Structures, the Political Body, at its expense, shall furnish to the Railroad a legible electronic set of reproducible "as constructed" Plans of the Structures.

E. The Railroad's review and approval of the Plans in no way relieves the Political Body or the Contractor from their responsibilities, obligations and/or liabilities under this Agreement, and will be given with the understanding that the Railroad makes no representations or warranty as to the validity, accuracy, legal compliance or completeness of the Plans and that any reliance by the Political Body or Contractor on the Plans is at the risk of the Political Body and Contractor.

Section 9. NON-RAILROAD IMPROVEMENTS

A. Submittal of plans and specifications for protecting, encasing, reinforcing, relocation, replacing, removing and abandoning in place all non-railroad owned facilities

Docusign Envelope ID: D24B0E46-A040-4DCF-9159-2076E4A3664D

(the "Non Railroad Facilities") affected by the Project including, without limitation, utilities, fiber optics, pipelines, wirelines, communication lines and fences is required under Section 8. The Non Railroad Facilities plans and specifications shall comply with Railroad's standard specifications and requirements, including, without limitation, American Railway Engineering and Maintenance-of-Way Association ("AREMA") standards and guidelines. Railroad has no obligation to supply additional land for any Non Railroad Facilities and does not waive its right to assert preemption defenses, challenge the right-to-take, or pursue compensation in any condemnation action, regardless if the submitted Non Railroad Facilities plans and specifications comply with Railroad's standard specifications and requirements. Railroad has no obligation to permit any Non Railroad Facilities to be abandoned in place or relocated on Railroad's property.

B. Upon Railroad's approval of submitted Non Railroad Facilities plans and specifications, Railroad will attempt to incorporate them into new agreements or supplements of existing agreements with Non Railroad Facilities owners or operators. Railroad may use its standard terms and conditions, including, without limitation, its standard license fee and administrative charges when requiring supplements or new agreements for Non Railroad Facilities. Non Railroad Facilities work shall not commence before a supplement or new agreement has been fully executed by Railroad and the Non Railroad Facilities owner or operator, or before Railroad and Political Body mutually agree in writing to (i) deem the approved Non Railroad Facilities plans and specifications to be Plans pursuant to Section 8B, (ii) deem the Non Railroad Facilities part of the Structures, and (iii) supplement this Agreement with terms and conditions covering the Non Railroad Facilities.

Section 10. RAILROAD'S COORDINATION REQUIREMENTS

The Political Body, at its expense, shall ensure that the Contractor complies with all of the terms and conditions contained in the Railroad's Coordination Requirements that are described in **Exhibit D**, attached hereto and hereby made a part hereof, and other special guidelines and/or requirements that the Railroad may provide to the Political Body for this Project.

Section 11. EFFECTIVE DATE; TERM; TERMINATION

A. This Agreement is effective as of the Effective Date first herein written and shall continue in full force and effect for as long as the Structures remains on the Railroad's property.

B. The Railroad, if it so elects, may terminate this Agreement effective upon delivery of written notice to the Political Body in the event the Political Body does not commence construction on the portion of the Project located on the Railroad's property within twelve (12) months from the Effective Date.

C. If the Agreement is terminated as provided above, or for any other reason, the Political Body shall pay to the Railroad all actual costs incurred by the Railroad in

Docusign Envelope ID: D24B0E46-A040-4DCF-9159-2076E4A3664D

connection with the Project up to the date of termination, including, without limitation, all actual costs incurred by the Railroad in connection with reviewing any preliminary or final Project Plans.

Section 12. CONDITIONS TO BE MET BEFORE POLITICAL BODY CAN COMMENCE WORK

Neither the Political Body nor the Contractor may commence any work within the Crossing Area or on any other Railroad property until:

(i) The Railroad and the Political Body have executed this Agreement.

(ii) The Railroad has provided to the Political Body the Railroad's written approval of the Plans.

(iii) Each Contractor has executed Railroad's Contractor's Right of Entry Agreement and has obtained and/or provided to the Railroad the insurance policies, certificates, binders, and/or endorsements required under the Contractor's Right of Entry Agreement.

(iv) Each Contractor has given the advance notice(s) required under the Contractor's Right of Entry Agreement to the Railroad Representative named in the Contractor's Right of Entry Agreement.

Section 13. FUTURE PROJECTS

Future projects involving substantial maintenance, repair, reconstruction, renewal and/or demolition of the Structures shall not commence until Railroad and Political Body agree on the plans for such future projects, cost allocations, right of entry terms and conditions and temporary construction rights, terms and conditions.

Section 14. ASSIGNMENT; SUCCESSORS AND ASSIGNS

A. Political Body shall not assign this Agreement without the prior written consent of Railroad.

B. Subject to the provisions of Paragraph A above, this Agreement shall inure to the benefit of and be binding upon the successors and assigns of Railroad and Political Body.

Section 15. SPECIAL PROVISIONS PERTAINING TO AMERICAN RECOVERY AND REINVESTMENT ACT OF 2009

If the Political Body will be receiving American Recovery and Reinvestment Act ("ARRA") funding for the Project, the Political Body agrees that it is responsible in performing and completing all ARRA reporting documents for the Project. The Political

Docusign Envelope ID: D24B0E46-A040-4DCF-9159-2076E4A3664D

Body confirms and acknowledges that Section 1512 of the ARRA provisions applies only to a "recipient" receiving ARRA funding directing from the federal government and, therefore, (i) the ARRA reporting requirements are the responsibility of the Political Body and not of the Railroad, and (ii) the Political Body shall not delegate any ARRA reporting responsibilities to the Railroad. The Political Body also confirms and acknowledges that (i) the Railroad shall provide to the Political Body the Railroad's standard and customary billing for expenses incurred by the Railroad for the Project including the Railroad's standard and customary documentation to support such billing, and (ii) such standard and customary billing and documentation from the Railroad provides the information needed by the Political Body to perform and complete the ARRA reporting documents. The Railroad confirms that the Political Body and the Federal Highway Administration shall have the right to audit the Railroad's billing and documentation for the Project as provided in Section 9 of **Exhibit B** of this Agreement.

Docusign Envelope ID: D24B0E46-A040-4DCF-9159-2076E4A3664D

IN WITNESS WHEREOF, the parties have caused this Agreement to be duly executed as of the Effective Date first herein written.

UNION PACIFIC RAILROAD COMPANY
(Federal Tax ID #94-6001323)

Signed by:
DAVID LAPLANTE
BF02384623D2403...

By _____
Printed Name: DAVID LAPLANTE
Title: Director - Real Estate Contracts

CAMERON COUNTY REGIONAL MOBILITY AUTHORITY

By _____
Printed Name: Frank Parker, Jr.
Title: Chairman

Docusign Envelope ID: D24B0E46-A040-4DCF-9159-2076E4A3664D

EXHIBIT A
TO
PUBLIC HIGHWAY OVERPASS AGREEMENT

Exhibit A will be a print showing the Crossing Area (see Recitals)

Docusign Envelope ID: D24B0E46-A040-4DCF-9159-2076E4A3664D

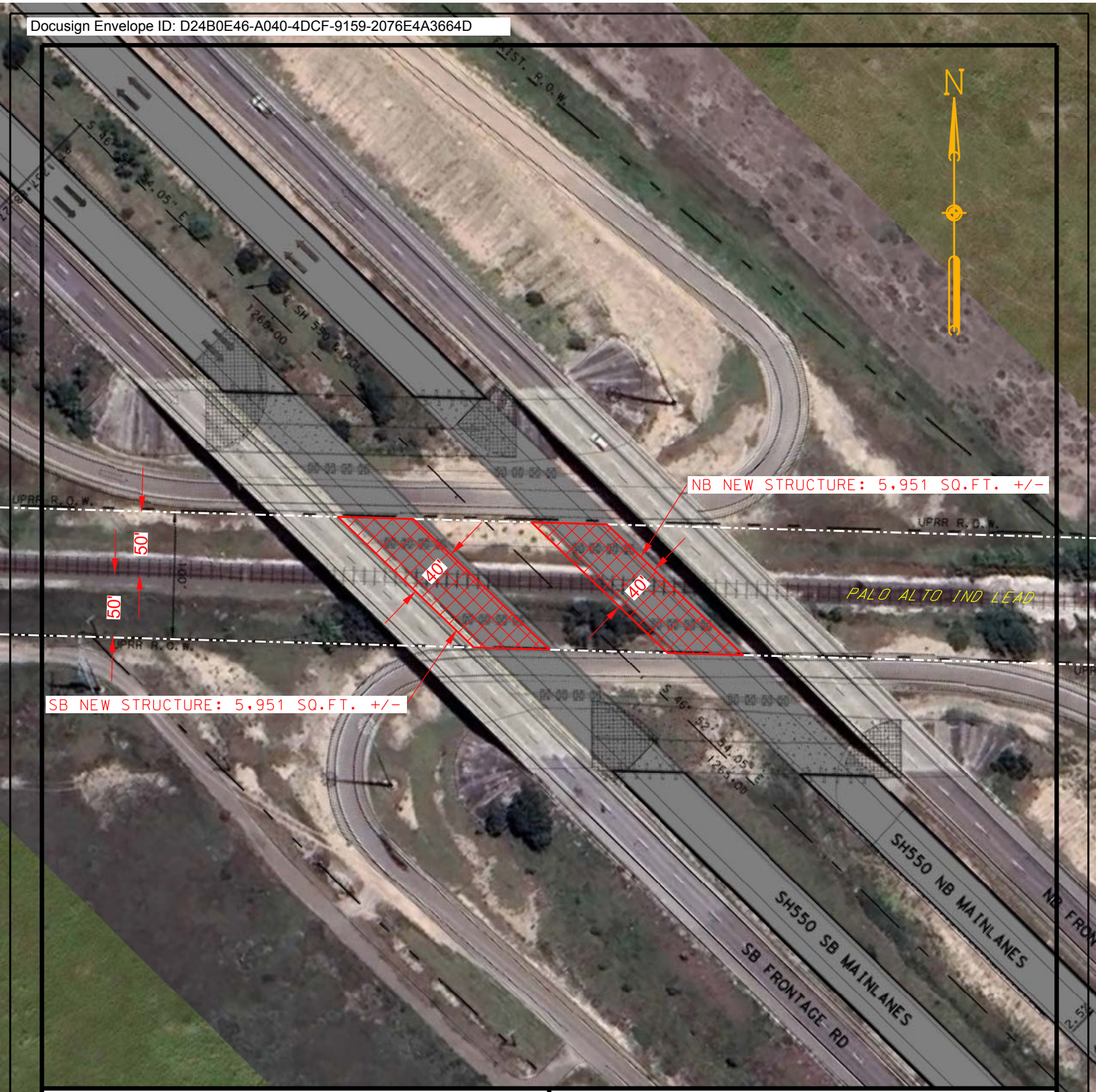

LEGEND:

NEW STRUCTURES

UPRRCO. R/W OUTLINED

CADD FILENAME	0773787
SCAN FILENAME	AERIAL PRINT

NOTE: BEFORE YOU BEGIN ANY WORK, SEE AGREEMENT FOR FIBER OPTIC PROVISIONS.

EXHIBIT "A"

UNION PACIFIC RAILROAD COMPANY

BROWNSVILLE, CAMERON COUNTY, TX

M.P. 1.60 TO 1.62 - PALO ALTO IND LEAD

UP/TX/VO/PALOALTOINDLD1
SCALE: 1" = 100'

OFFICE OF REAL ESTATE
OMAHA, NEBRASKA DATE: 10-9-2024

DSK FILE: 0773787

Docusign Envelope ID: D24B0E46-A040-4DCF-9159-2076E4A3664D

EXHIBIT A-1
TO
PUBLIC HIGHWAY OVERPASS AGREEMENT

Exhibit A-1 will be the type, size and location prints of the Structures (see Recitals).

Docusign Envelope ID: D24B0E46-A040-4DCF-9159-2076E4A3664D

FED.RD. DIV.NO.	PROJECT NO.		SHEET NO.
6	STP 2020(678)MM		1
STATE	DIST.	COUNTY	
TEXAS	PHARR	CAMERON	
CONT.	SECT.	JOB	HIGHWAY NO.
0684	01	068	SH550

FUNCTIONAL CLASS: FREEWAY
DESIGN SPEED: MAINLANES 70 MPH
RAMPS 60 MPH
A.D.T.2019 = 16,107
A.D.T.2039 = 25,550

INDEX OF SHEETS
SEE SHEET NO. 2

STATE OF TEXAS
DEPARTMENT OF TRANSPORTATION

PLANS OF PROPOSED STATE HIGHWAY IMPROVEMENT

STATE AID PROJECT NO. STP 2020(678)MM

SH 550
CAMERON COUNTY

TXDOT CSJ 0684-01-068

NET LENGTH OF PROJECT = 12,925.00 LF = 2.447 MILES

RDWY.	= 12,505.00	= 2.368 MI
BRIDGE	= 420.00	= 0.079 MI
TOTAL	= 12,925.00	= 2.447 MI

CAMERON COUNTY REGIONAL MOBILITY AUTHORITY
STATE HIGHWAY 550

LIMITS: FROM 0.23 MILES SOUTH OF FM 1847
TO 1.13 MILES SOUTH EAST OF UPRR AT FM 3248

FOR THE CONSTRUCTION OF NEW LOCATION FREEWAY CONSISTING OF GRADING, FLEXIBLE BASE, LIME TREATED SUBGRADE, ASPHALTIC CONCRETE PAVEMENT, SIGNING & PAVEMENT MARKINGS, CROSS CULVERTS, BRIDGE STRUCTURES AND ILLUMINATION. INCIDENTAL CONSTRUCTION TO CONSIST OF PAVEMENT MARKINGS.

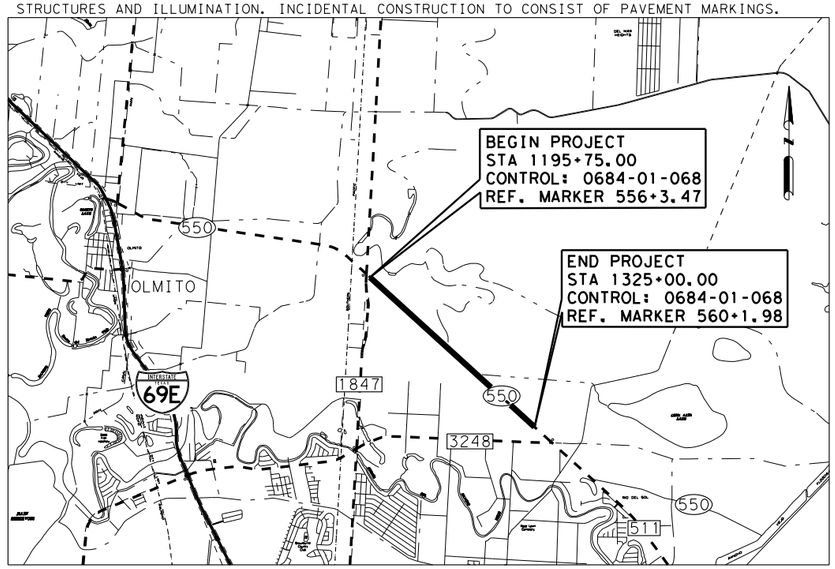

NOT TO SCALE

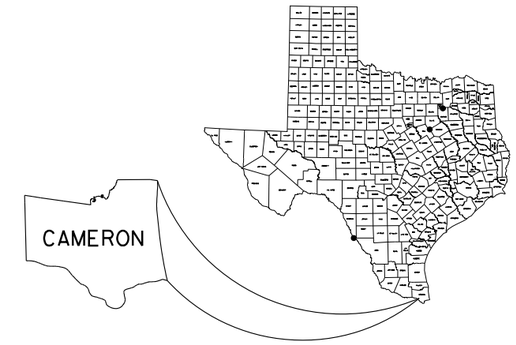

FINAL CONTRACT PRICE: _____
CONTRACTOR NAME: _____
CONTRACTOR ADDRESS: _____
LETTING DATE: _____
DATE WORK BEGAN: _____
DATE WORK COMPLETED: _____
DATE OF ACCEPTANCE: _____

CHANGE ORDERS & SUPP. AGREEMENTS

ALL CONSTRUCTION WORK WAS PERFORMED IN ACCORDANCE WITH THE PLANS SPECIFICATIONS AND CONTRACT. ALL PROPOSED CONSTRUCTION WAS COMPLETED UNLESS OTHERWISE NOTED.

NAME _____ DATE _____

LOCAL ENTITIES

CAMERON COUNTY RMA CONCURRENCE: DATE:
NAME TITLE

CAMERON COUNTY DRAINAGE DIST. NO.1 CONCURRENCE: DATE:
NAME TITLE

T.D.L.R. INSPECTION NOT REQUIRED

CONSULTING ENGINEERS
TEXAS BOARD OF PROFESSIONAL ENGINEERS NO: 4440

PREPARED BY:
(DESIGN CONSULTANT)
Philip J. Pawelek, P.E.
PHILLIP J. PAWELEK, PE #82739
PROJECT MANAGER

6/25/2024
DATE

STATE OF TEXAS
JONATHAN T. PRUKOP
146702
LICENSED
PROFESSIONAL ENGINEER
Jonathan Prukop P.E.
6/25/2024

EXCEPTIONS: NONE
EQUATIONS: NONE
RAILROAD CROSSINGS: STA CROSSING: 1263+00.00
UPRR MILEPOINT: 0000.4950
DOT: 440524A

SPECIFICATIONS ADOPTED BY THE TEXAS DEPARTMENT OF TRANSPORTATION, NOVEMBER 1, 2014 AND SPECIFICATION ITEMS LISTED AND DATED AS FOLLOWS, SHALL GOVERN ON THIS PROJECT: REQUIRED CONTRACT PROVISIONS FOR ALL FEDERAL AID CONSTRUCTION CONTRACTS (FORM FHWA 1273, JULY, 2022).

© 2023 BY TEXAS DEPARTMENT OF TRANSPORTATION
ALL RIGHTS RESERVED.

RMA
CAMERON COUNTY REGIONAL MOBILITY AUTHORITY

CAMERON COUNTY REGIONAL MOBILITY AUTHORITY

FRANK PARKER, JR. - CHAIRMAN
MICHAEL SCAIEF - VICE CHAIRMAN
AL VILLARREAL - TREASURER
ARTURO NELSON - SECRETARY
MARK ESPARZA - BOARD MEMBER
LEO R. GARZA - BOARD MEMBER
JULIE GUERRA-RAMIREZ - BOARD MEMBER
PETE SEPULVEDA JR. - EXECUTIVE DIRECTOR

© TXDOT 2023
Texas Department of Transportation

APPROVED FOR LETTING: _____
DIRECTOR, BRIDGE DIVISION

SUBMITTED FOR LETTING: _____
ADVANCED PROJECT DEVELOPMENT SUPERVISOR

APPROVED FOR LETTING: _____
DIRECTOR, TRAFFIC OPERATIONS DIVISION

RECOMMENDED FOR LETTING: _____
DISTRICT ENGINEER

APPROVED FOR LETTING: _____
DIRECTOR, DESIGN DIVISION

SH 550, CSJ:0684-01-068

COUNTY CAMERON
HWY. NO. SH550
DATE ACCEPTED _____
PROJECT NO. _____
LETTING DATE _____

SCALE: 1.0000 ft / in.
PLOTTED ON: 6/25/2024 8:19:37 AM

PEN TABLE:N:\Project\u2716\WA#04 U2716.400 SH 550 GAP II\500*PS&E\PlanSet01\Dgn\Standards\Gap II.tbl
DESIGN FILENAME: DGN$SPEC$

Docusign Envelope ID: D24B0E46-A040-4DCF-9159-2076E4A3664D

INDEX OF SHEETS

SHEET NO.	DESCRIPTION
	GENERAL
1	TITLE SHEET
2	INDEX OF SHEETS
3 - 4	EXISTING TYPICAL SECTION
5 - 7	PROPOSED TYPICAL SECTIONS
8	AREA MAP
	BRIDGE DETAILS
9	NB BRIDGE LAYOUT
10	NB BRIDGE TYPICAL SECTION
11	NB TEST HOLE DATA SHEET
12	NB BRIDGE ESTIMATED QUANTITIES
13 - 14	NB ABUTMENT
15 - 17	NB INTERIOR BENT DETAILS
18 - 19	NB GIRDER LAYOUT SPANS
20 - 23	NB PRESTRESSED CONCRETE GIRDER UNIT
24	SB BRIDGE LAYOUT
25	SB BRIDGE TYPICAL SECTION
26	SB TEST HOLE DATA SHEET
27	SB BRIDGE ESTIMATED QUANTITIES
28 - 29	SB ABUTMENT
30 - 32	SB INTERIOR BENT DETAILS
33 - 34	SB GIRDER LAYOUT SPANS
35 - 38	SB PRESTRESSED CONCRETE GIRDER UNIT
39	CRASH WALL
	BRIDGE STANDARDS
[S] 40 - 41	CSAB
[S] 42	IGND
[S] 43 - 44	IGD
[S] 45 - 47	IGEB
[S] 48 - 49	IGMS
[S] 50	IGTS
[S] 51 - 52	MEBR(C)
[S] 53 - 55	BMCS
[S] 56	CP
[S] 57	CRR
[S] 58 - 59	FD
[S] 60 - 63	PCP
[S] 64	PCP-FAB
[S] 65	SEJ-M
[S] 66 - 67	CLF-RO
[S] 68 - 69	TYPE SSTR
[S] 70 - 72	RAILROAD REQUIREMENTS FOR BRIDGE CONSTRUCTION
[S] 73	RAILROAD SCOPE OF WORK

THE STANDARD SHEETS HAVE BEEN SELECTED BY ME OR UNDER MY RESPONSIBLE SUPERVISION AS BEING APPLICABLE TO THIS PROJECT.

DATE

NAME

STATE OF TEXAS
JONATHAN T. PRUKOP
146702
LICENSED
PROFESSIONAL ENGINEER

P.E.
6/25/2024

LEGEND

[S] - STATE STANDARD
[D] - DISTRICT STANDARD
[M] - MODIFIED STANDARD

SH 550

INDEX OF SHEETS

SCALE: NTS

© TxDOT 2023
Texas Department of Transportation
©2023 by Texas Department of Transportation all rights reserved.

RMA CAMERON COUNTY REGIONAL MOBILITY AUTHORITY

RRP CONSULTING ENGINEERS
TEXAS BOARD OF PROFESSIONAL ENGINEERS NO: 4440

DRAWING PREPARED BY:

FED. RD. DIV. NO.	FEDERAL AID PROJECT NO.		SHEET NO.
6	STP 2020(678)MM		
DGN:	STATE	DIST.	COUNTY
CHK DGN:	TEXAS	PHARR	CAMERON
DWG:	CONT.	SECT.	JOB	HIGHWAY NO.
CHK DWG:	0684	01	068	SH 550

Plotted on: 6/26/2024

Pen Table:PEN
Design Filename: $NAME$

Docusign Envelope ID: D24B0E46-A040-4DCF-9159-2076E4A3664D

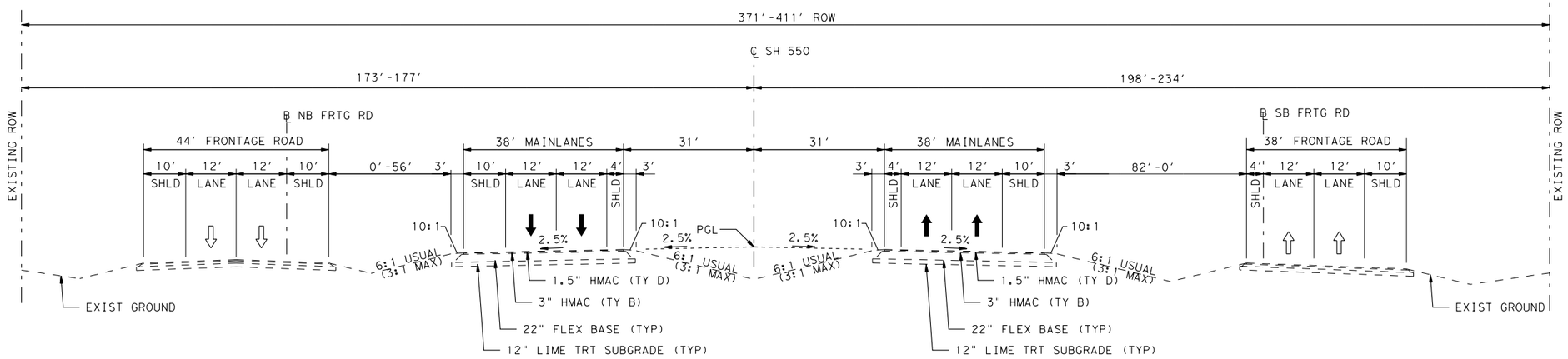

EXISTING SH 550

TYPICAL SECTION

STA 1204+28.01 TO STA 1224+90.55 (NB)
STA 1195+75.26 TO STA 1214+75.16 (SB)

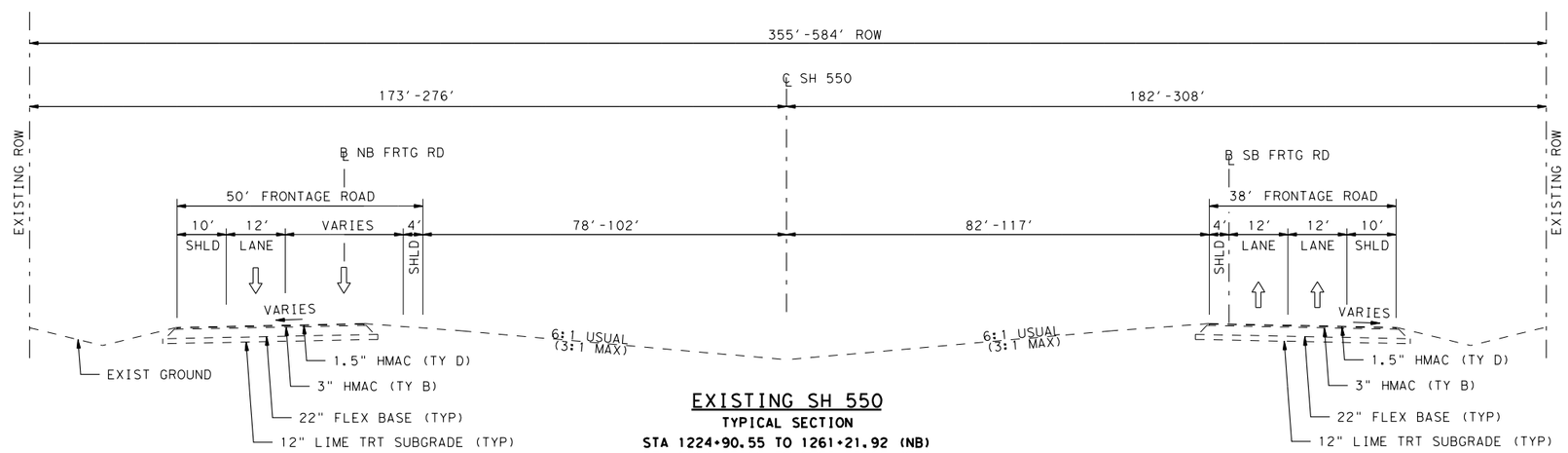

EXISTING SH 550

TYPICAL SECTION

STA 1224+90.55 TO 1261+21.92 (NB)
STA 1214+75.16 TO 1260+55.16 (SB)
STA 1265+41.92 TO STA 1323+00.00 (NB)
STA 1264+75.16 TO STA 1323+00.00 (SB)

UPPR BRIDGE
STA 1261+21.92 TO STA 1265+41.92 (NB)
STA 1260+55.16 TO STA 1264+75.16 (SB)

STATE OF TEXAS
JONATHAN T. PRUKOP
146702
LICENSED PROFESSIONAL ENGINEER

P.E.

6/25/2024

SH 550

EXISTING TYPICAL SECTIONS

SHEET 1 OF 2

SCALE: NTS

© TxDOT 2023
Texas Department of Transportation
©2023 by Texas Department of Transportation all rights reserved.

RMA CAMERON COUNTY REGIONAL MOBILITY AUTHORITY

RRP CONSULTING ENGINEERS
TEXAS BOARD OF PROFESSIONAL ENGINEERS NO: 4440

DRAWING PREPARED BY:

FED. RD. DIV. NO.	FEDERAL AID PROJECT NO.			SHEET NO.
6	STP 2020(678)MM			
DGN:	STATE	DIST.	COUNTY	
CHK DGN:	TEXAS	PHARR	CAMERON	
DWG:	CONT.	SECT.	JOB	HIGHWAY NO.
CHK DWG:	0684	01	068	SH 550

Plotted on: 6/25/2024
Pen Table:N:\Project\U2716\WA#04 U2716.400 SH 550 GAP II\500*PS&E\PlanSet01\Dgn\Standards\Gap II.tbl
Design Filename: N:\Project\U2716\WA#04 U2716.400 SH 550 GAP II\500*PS&E\PlanSet01\Dgn\rr*SH550TYPSECT.dgn

Docusign Envelope ID: D24B0E46-A040-4DCF-9159-2076E4A3664D

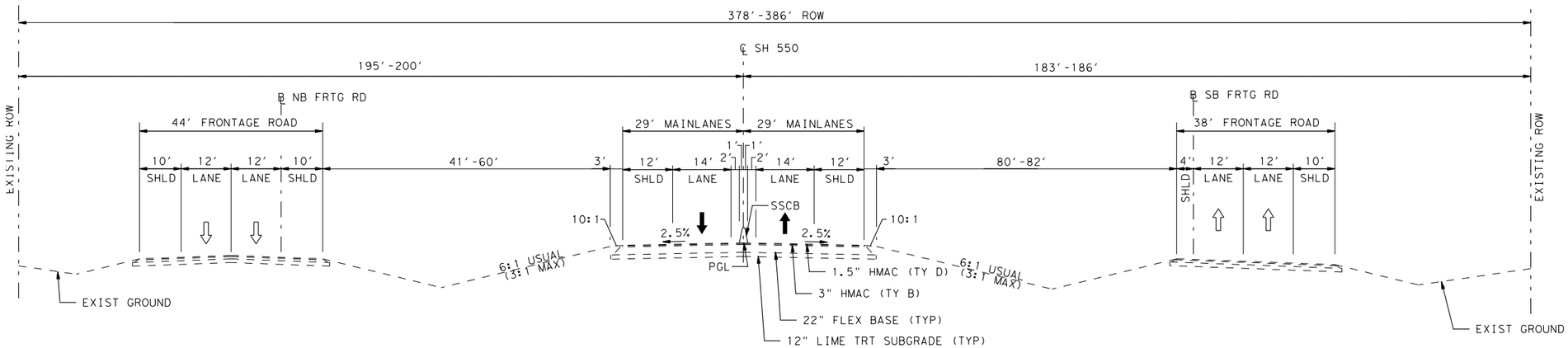

EXISTING SH 550

TYPICAL SECTION

STA 1323+00.00 TO STA 1325+00.00 (ML)

STATE OF TEXAS
JONATHAN T. PRUKOP
146702
LICENSED PROFESSIONAL ENGINEER

P.E.

6/25/2024

SH 550

EXISTING TYPICAL SECTIONS

SHEET 2 OF 2

SCALE: NTS

© TxDOT 2023
Texas Department of Transportation
©2023 by Texas Department of Transportation all rights reserved.

RMA CAMERON COUNTY REGIONAL MOBILITY AUTHORITY

RRP CONSULTING ENGINEERS
TEXAS BOARD OF PROFESSIONAL ENGINEERS NO: 4440

DRAWING PREPARED BY:

FED. RD. DIV. NO.	FEDERAL AID PROJECT NO.		SHEET NO.
6	STP 2020(678)MM		
DGN:	STATE	DIST.	COUNTY
CHK DGN:	TEXAS	PHARR	CAMERON
DWG:	CONT.	SECT.	JOB	HIGHWAY NO.
CHK DWG:	0684	01	068	SH 550

Plotted on: 6/25/2024

Pen Table:N:\Project\u2716\WA#04 U2716.400 SH 550 GAP II\500*PS&E\PlanSet01\Dgn\Standards\Gap II.tbl
Design Filename:N:\Project\u2716\WA#04 U2716.400 SH 550 GAP II\500*PS&E\PlanSet01\Dgn\RR*SH550TYPSECT.dgn

Docusign Envelope ID: D24B0E46-A040-4DCF-9159-2076E4A3664D

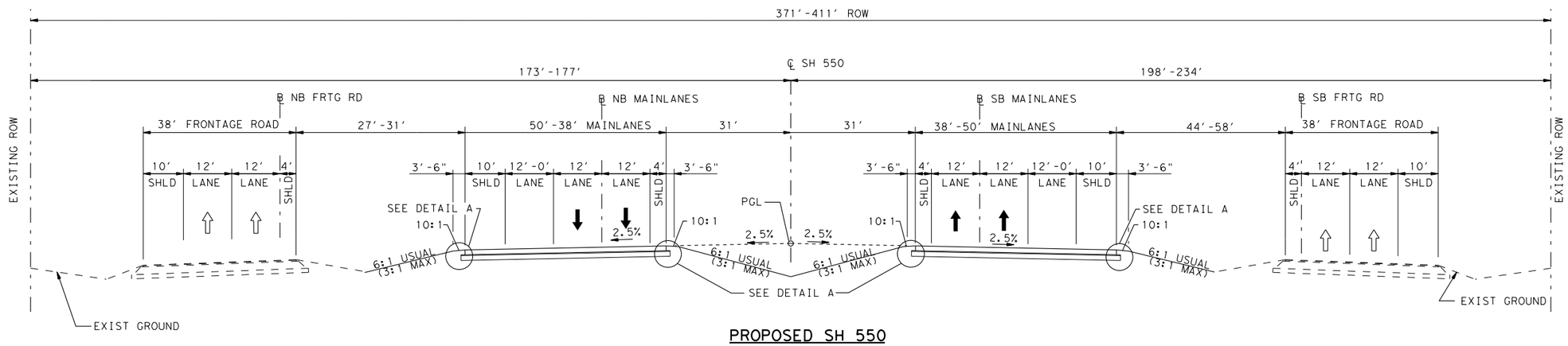

PROPOSED SH 550

TYPICAL SECTION

STA 1195.75 TO STA 1224+90.55 (ML)

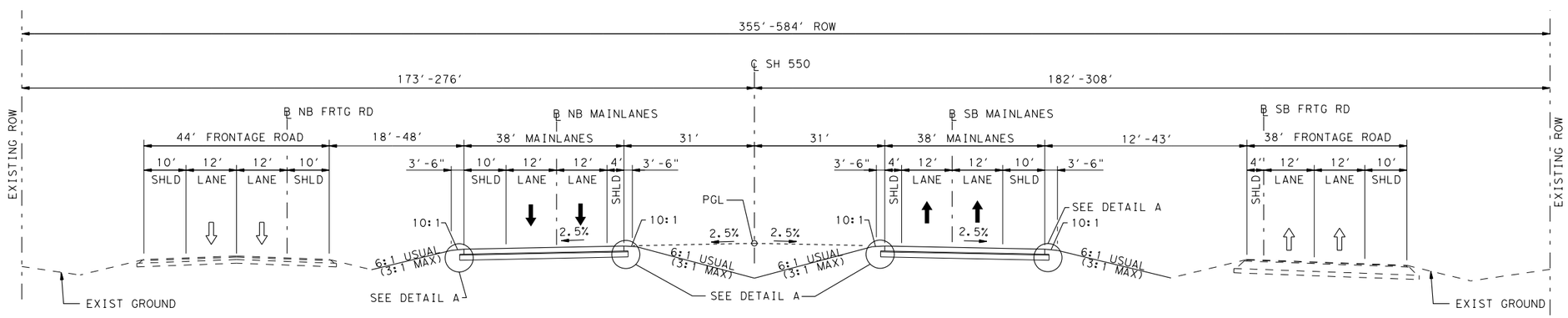

PROPOSED SH 550

TYPICAL SECTION

STA 1224+90.55 TO STA 1253+20.00 (NB)
STA 1279+25.00 TO STA 1297+39.25 (NB)
STA 1224+90.55 TO STA 1253+50.00 (SB)
STA 1275+85.00 TO STA 1297+39.25 (SB)

UPPR BRIDGE
STA 1260+88.54 TO STA 1265+08.54

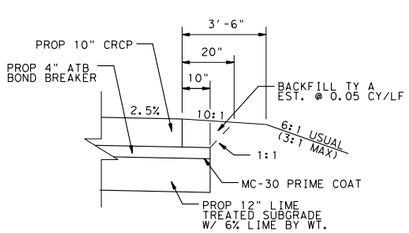

DETAIL A

GENERAL NOTES:

1. VARY THE GOVERNING SLOPES AS APPROVED BY THE ENGINEER TO ACCOMMODATE FIXTURES OR UNUSUAL CONDITIONS.
2. THE 2% LIME SHOWN ON TYPICAL SECTIONS FOR ITEM 247 "FLEX BASE" IS SEPARATE FROM LIME WHICH MAY BE REQUIRED TO MEET P.I. AND TRIAXIAL REQUIREMENTS ADDED AT CONTRACTOR'S EXPENSE.
3. PGL - DENOTES PROFILE GRADE LINE
4. LOCATE PERMISSABLE CONSTRUCTION JOINTS ON STRIPING LINES, UNLESS OTHERWISE DIRECTED BY THE ENGINEER.
5. REMOVE EXISTING ACP BEHIND SAWCUT LINES IN ACCORDANCE WITH ITEM 105. MILL EXISTING SURFACE COURSES, WHERE SHOWN IN THE PLANS IN ACCORDANCE WITH ITEM 354.
6. ROLL THE COMPLETE BASE BEFORE SHAPING THE EARTH SHOULDER. PERFORM FINAL COMPACTION OVER THE BASE AND EDGE OF SHOULDER. KEEP ALL GRADING ACTIVITIES INSIDE EXISTING R.O.W.
7. ONE STATION IS EQUIVALENT TO 100 FT.
8. ONE INCH DEPTH OF ACP IS APPROXIMATELY EQUIVALENT TO 114 LBS/SY.
9. SAWCUTS ARE SUBSIDIARY TO ITEM 3224 "D-GR HMA (QCQA)".
10. PLACEMENT OF BACKFILL TYPE A MATERIAL WILL BE PAID AS ITEM 134 AND WILL MEET THE MATERIAL REQUIREMENTS OF ITEM 132 "EMBANKMENT".

STATE OF TEXAS
JONATHAN T. PRUKOP
146702
LICENSED PROFESSIONAL ENGINEER

P.E.

6/25/2024

SH 550

PROPOSED TYPICAL SECTIONS

SHEET 1 OF 3

SCALE: NTS

© TxDOT 2023
Texas Department of Transportation
©2023 by Texas Department of Transportation all rights reserved.

RMA CAMERON COUNTY REGIONAL MOBILITY AUTHORITY

RRP CONSULTING ENGINEERS
TEXAS BOARD OF PROFESSIONAL ENGINEERS NO: 4440

DRAWING PREPARED BY:

FED. RD. DIV. NO.	FEDERAL AID PROJECT NO.		SHEET NO.
6	STP 2020(678)MM		
DGN:	STATE	DIST.	COUNTY
CHK DGN:	TEXAS	PHARR	CAMERON
DWG:	CONT.	SECT.	JOB	HIGHWAY NO.
CHK DWG:	0684	01	068	SH 550

Plotted on: 6/25/2024

Pen Table:N:\Project\u2716\WA#04 U2716.400 SH 550 GAP II\500*PS&E\PlanSet01\Dgn\Standards\Gap II.tbl
Design Filename: N:\Project\u2716\WA#04 U2716.400 SH 550 GAP II\500*PS&E\PlanSet01\Dgn\rr*SH550TYPSECT-CONC*ALT.dgn

Docusign Envelope ID: D24B0E46-A040-4DCF-9159-2076E4A3664D

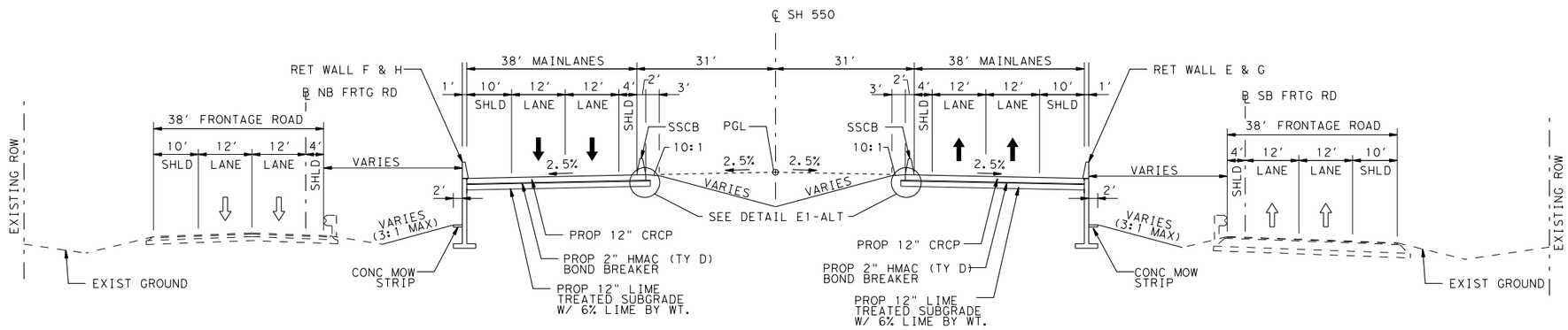

PROPOSED SH 550

TYPICAL SECTION

STA 1253+20.00 TO STA 1258+10.00 (NB)
STA 1269+25.00 TO STA 1279+25.00 (NB)
STA 1267+30.00 TO STA 1275+85.00 (SB)

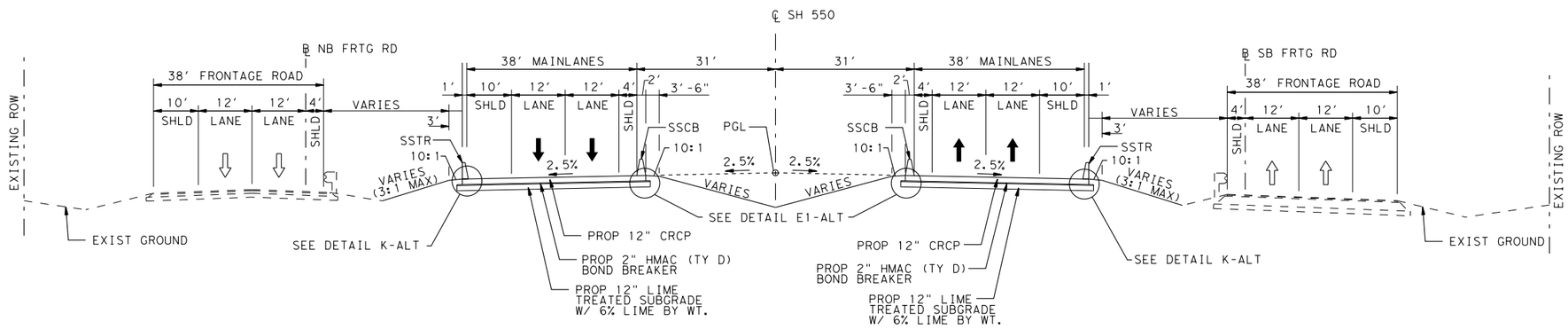

PROPOSED SH 550

TYPICAL SECTION

STA 1258+10.00 TO STA 1261+21.63 (NB)
STA 1253+50.00 TO STA 1260+54.87 (SB)
STA 1265+41.63 TO STA 1269+25.00 (NB)
STA 1264+74.87 TO STA 1267+30.00 (SB)

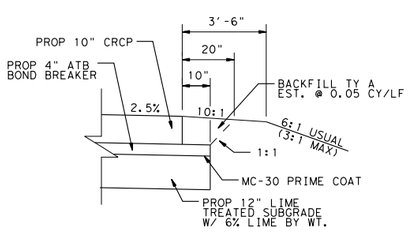

DETAIL A

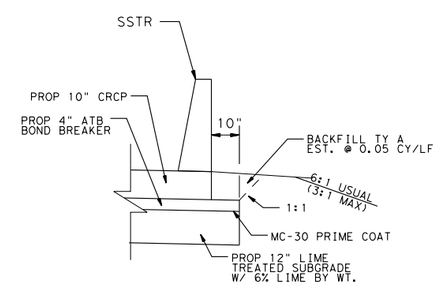

DETAIL K-ALT

GENERAL NOTES:

1. VARY THE GOVERNING SLOPES AS APPROVED BY THE ENGINEER TO ACCOMODATE FIXTURES OR UNUSUAL CONDITIONS.
2. THE 2% LIME SHOWN ON TYPICAL SECTIONS FOR ITEM 247 "FLEX BASE" IS SEPARATE FROM LIME WHICH MAY BE REQUIRED TO MEET P.I. AND TRIAXIAL REQUIREMENTS ADDED AT CONTRACTOR'S EXPENSE.
3. PGL - DENOTES PROFILE GRADE LINE
4. LOCATE PERMISSABLE CONSTRUCTION JOINTS ON STRIPING LINES, UNLESS OTHERWISE DIRECTED BY THE ENGINEER.
5. REMOVE EXISTING ACP BEHIND SAWCUT LINES IN ACCORDANCE WITH ITEM 105. MILL EXISTING SURFACE COURSES, WHERE SHOWN IN THE PLANS IN ACCORDANCE WITH ITEM 354.
6. ROLL THE COMPLETE BASE BEFORE SHAPING THE EARTH SHOULDER. PERFORM FINAL COMPACTION OVER THE BASE AND EDGE OF SHOULDER. KEEP ALL GRADING ACTIVITIES INSIDE EXISTING R.O.W.
7. ONE STATION IS EQUIVALENT TO 100 FT.
8. ONE INCH DEPTH OF ACP IS APPROXIMATELY EQUIVALENT TO 114 LBS/SY.
9. SAWCUTS ARE SUBSIDIARY TO ITEM 341.
10. PLACEMENT OF BACKFILL TYPE A MATERIAL WILL BE PAID AS ITEM 134 AND WILL MEET THE MATERIAL REQUIREMENTS OF ITEM 132 "EMBANKMENT".

STATE OF TEXAS
JONATHAN T. PRUKOP
146702
LICENSED PROFESSIONAL ENGINEER

P.E.

6/25/2024

SH 550

PROPOSED TYPICAL SECTIONS

SHEET 2 OF 3

SCALE: NTS

© TxDOT 2023
Texas Department of Transportation
©2023 by Texas Department of Transportation all rights reserved.

RMA CAMERON COUNTY REGIONAL MOBILITY AUTHORITY

RRP CONSULTING ENGINEERS
TEXAS BOARD OF PROFESSIONAL ENGINEERS NO: 4440

DRAWING PREPARED BY:

FED. RD. DIV. NO.	FEDERAL AID PROJECT NO.		SHEET NO.
6	STP 2020(678)MM		
DGN:	STATE	DIST.	COUNTY
CHK DGN:	TEXAS	PHARR	CAMERON
DWG:	CONT.	SECT.	JOB	HIGHWAY NO.
CHK DWG:	0684	01	068	SH 550

Plotted on: 6/25/2024

Pen Table:N:\Project\U2716\WA#04 U2716.400 SH 550 GAP II\500*PS&E\PlanSet01\Dgn\Standards\Gap II.tbl
Design Filename: N:\Project\U2716\WA#04 U2716.400 SH 550 GAP II\500*PS&E\PlanSet01\Dgn\RR*SH550TYPSECT-CONC*ALT.dgn

Docusign Envelope ID: D24B0E46-A040-4DCF-9159-2076E4A3664D

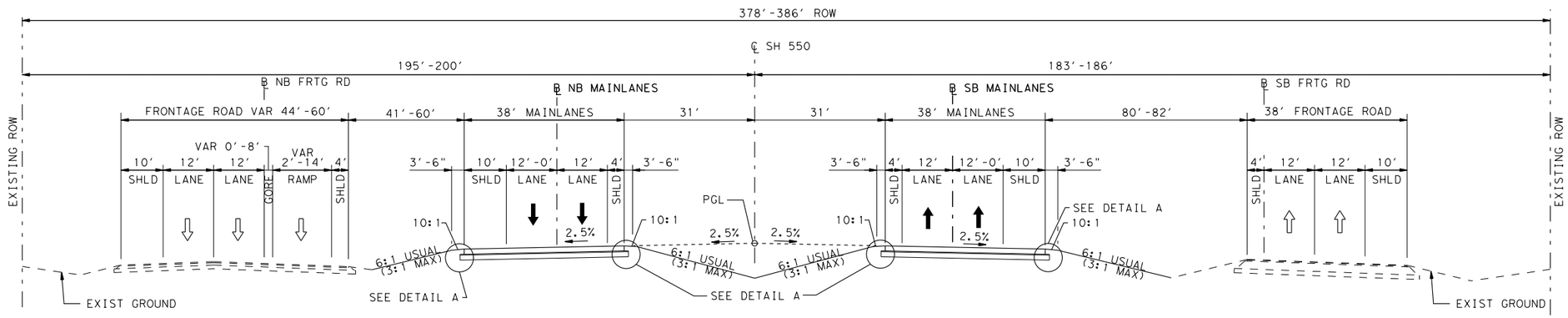

PROPOSED SH 550

TYPICAL SECTION

STA 1297+39.25 TO STA 1321+45.21 (ML)

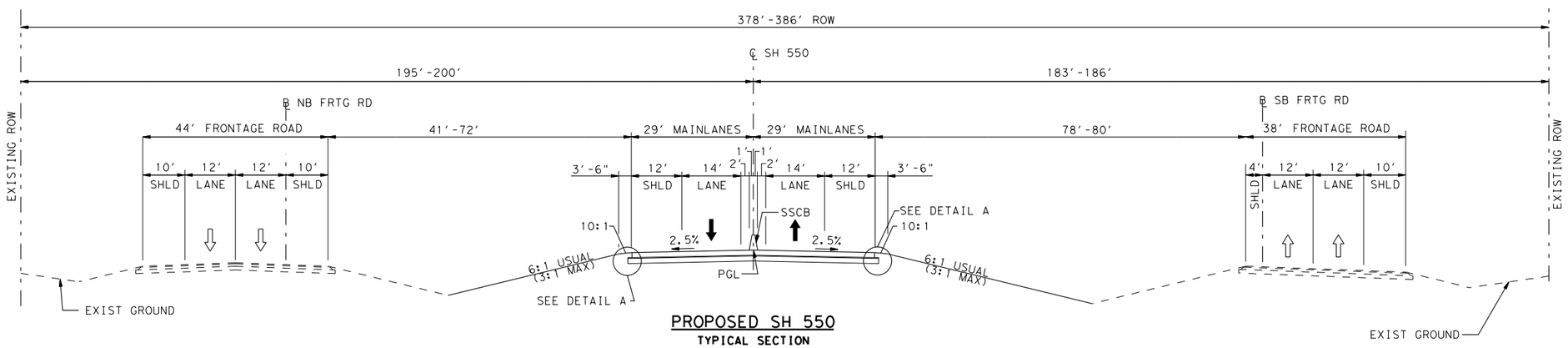

PROPOSED SH 550

TYPICAL SECTION

STA 1321+45.21 TO STA 1325+00.00

GENERAL NOTES:

1. VARY THE GOVERNING SLOPES AS APPROVED BY THE ENGINEER TO ACCOMODATE FIXTURES OR UNUSUAL CONDITIONS.
2. THE 2% LIME SHOWN ON TYPICAL SECTIONS FOR ITEM 247 "FLEX BASE" IS SEPARATE FROM LIME WHICH MAY BE REQUIRED TO MEET P.I. AND TRIAXIAL REQUIREMENTS ADDED AT CONTRACTOR'S EXPENSE.
3. PGL - DENOTES PROFILE GRADE LINE
4. LOCATE PERMISSABLE CONSTRUCTION JOINTS ON STRIPING LINES, UNLESS OTHERWISE DIRECTED BY THE ENGINEER.
5. REMOVE EXISTING ACP BEHIND SAWCUT LINES IN ACCORDANCE WITH ITEM 105. MILL EXISTING SURFACE COURSES, WHERE SHOWN IN THE PLANS IN ACCORDANCE WITH ITEM 354.
6. ROLL THE COMPLETE BASE BEFORE SHAPING THE EARTH SHOULDER. PERFORM FINAL COMPACTION OVER THE BASE AND EDGE OF SHOULDER. KEEP ALL GRADING ACTIVITIES INSIDE EXISTING R.O.W.
7. ONE STATION IS EQUIVALENT TO 100 FT.
8. ONE INCH DEPTH OF ACP IS APPROXIMATELY EQUIVALENT TO 114 LBS/SY.
9. SAWCUTS ARE SUBSIDIARY TO ITEM 341.
10. PLACEMENT OF BACKFILL TYPE A MATERIAL WILL BE PAID AS ITEM 134 AND WILL MEET THE MATERIAL REQUIREMENTS OF ITEM 132 "EMBANKMENT".

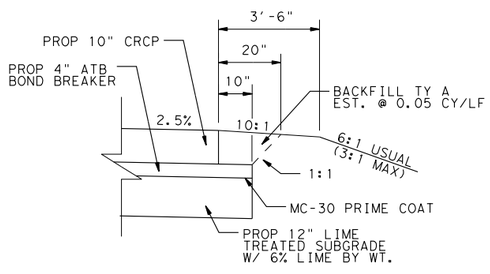

DETAIL A

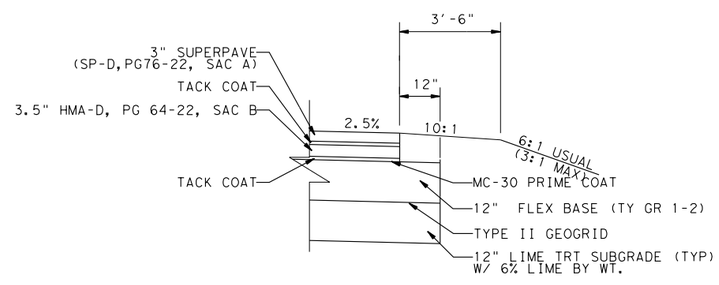

ASPHALT PAVEMENT DETAIL

STATE OF TEXAS
JONATHAN T. PRUKOP
146702
LICENSED PROFESSIONAL ENGINEER

P.E.

6/25/2024

SH 550

PROPOSED TYPICAL SECTIONS

SHEET 3 OF 3

SCALE: NTS

© TxDOT 2023
Texas Department of Transportation
©2023 by Texas Department of Transportation all rights reserved.

RMA CAMERON COUNTY REGIONAL MOBILITY AUTHORITY

RRP CONSULTING ENGINEERS
TEXAS BOARD OF PROFESSIONAL ENGINEERS NO: 4440

DRAWING PREPARED BY:

FED. RD. DIV. NO.	FEDERAL AID PROJECT NO.		SHEET NO.
6	STP 2020(678)MM		
DGN:	STATE	DIST.	COUNTY
CHK DGN:	TEXAS	PHARR	CAMERON
DWG:	CONT.	SECT.	JOB	HIGHWAY NO.
CHK DWG:	0684	01	068	SH 550

Plotted on: 6/25/2024

Pen Table:N:\Project\U2716\WA#04 U2716.400 SH 550 GAP II\500*PS&E\PlanSet01\Dgn\Standards\Gap II.tbl
Design Filename: N:\Project\U2716\WA#04 U2716.400 SH 550 GAP II\500*PS&E\PlanSet01\Dgn\RR*SH550TYPSECT-CONC*ALT.dgn

Docusign Envelope ID: D24B0E46-A040-4DCF-9159-2076E4A3664D

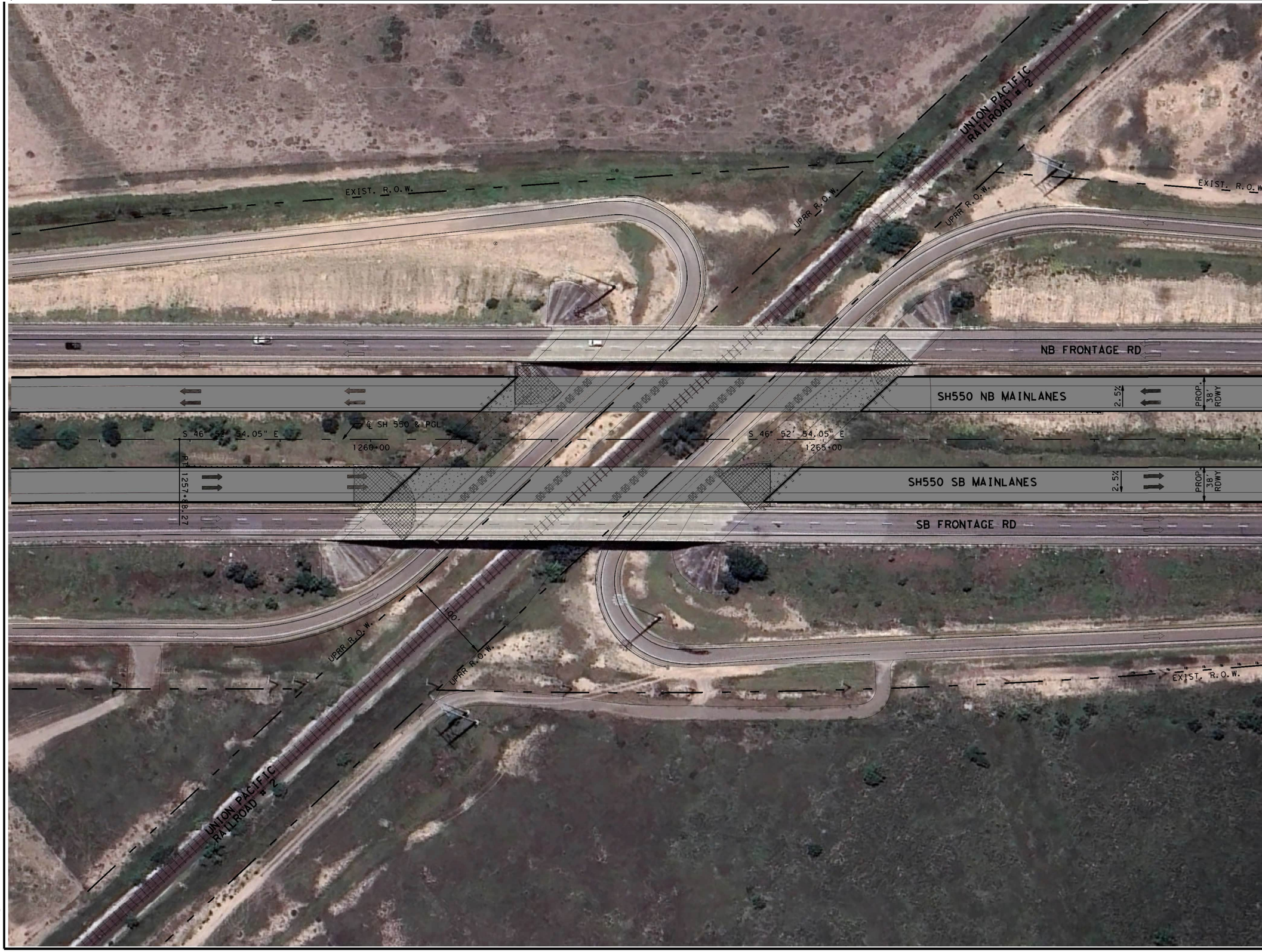

LEGEND

- EXIST. R.O.W.
- PROPOSED CONC PAVEMENT
- UNION PACIFIC RAIL ROAD
- PROPOSED CONC RIPRAP
- CONC RIPRAP REMOVAL

STATE OF TEXAS
JONATHAN T. PRUKOP
146702
LICENSED PROFESSIONAL ENGINEER

P.E.

6/25/2024

SH 550

UPRR CROSSING AREA MAP

SCALE: PLAN 1":100'

© TxDOT 2024
Texas Department of Transportation
©2024 by Texas Department of Transportation all rights reserved.

RMA CAMERON COUNTY REGIONAL MOBILITY AUTHORITY

RRP CONSULTING ENGINEERS
TEXAS BOARD OF PROFESSIONAL ENGINEERS NO: 4440

DRAWING PREPARED BY:

FED. RD. DIV. NO.	FEDERAL AID PROJECT NO.		SHEET NO.
6			

DGN:	STATE	DIST.	COUNTY
CHK DGN:	TEXAS	PHARR	CAMERON

DWG:	CONT.	SECT.	JOB	HIGHWAY NO.
CHK DWG:				

Plotted on: 6/25/2024

Pen Table:PEN
Design Filename: $NAME$

Docusign Envelope ID: D24B0E46-A040-4DCF-9159-2076E4A3664D

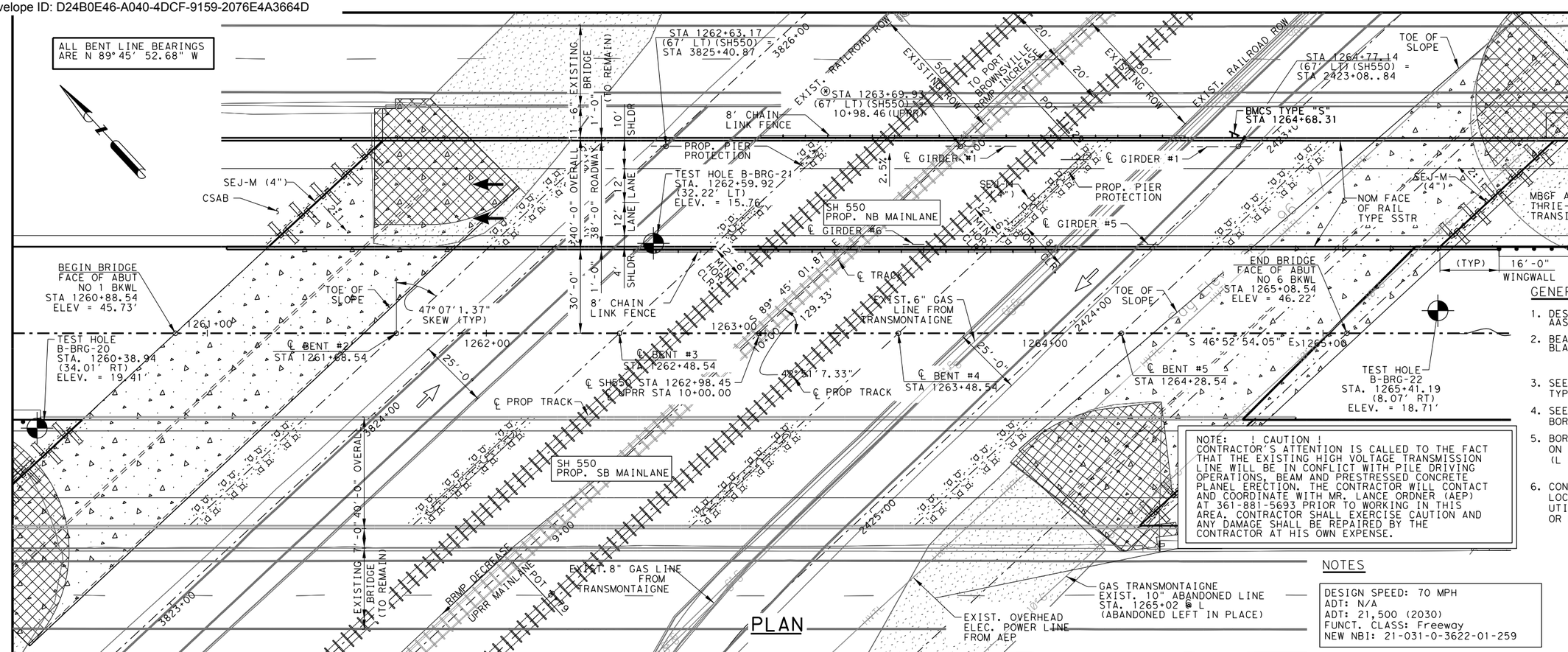

SH 550

BRIDGE LAYOUT

NB MAINLANE
UPRR #2 OVERPASS
SUPERSTRUCTURE INV/OPR RATINGS: 1.42/1.84

SCALE: PLAN 1":40'
PROFILE 1":40'

RMA
RIO METRO TRANSPORTATION MOBILITY AUTHORITY

L&G Engineering
Highway / Civil
Structural / Bridge
Environmental
Firm No.: F-4105
2100 W. Expressway 83
Mercedes, TX. 78570
Phone: (956) 565-3813
Fax: (956) 565-4018
903 S. Stewart Rd., Ste. 10
Mission, TX. 78572
Phone: (956) 585-1909
Fax: (956) 585-1927

DRAWING PREPARED BY: L&G ENGINEERING

SHEET 1 OF 10

FED. RD. DIV. NO.	FEDERAL AID PROJECT NO.		SHEET NO.
6	STP 2020(678)MM		

DGN:	STATE	DIST.	COUNTY	
CHK DGN:	TEXAS	PHARR	CAMERON	
DWG:	CONT.	SECT.	JOB	HIGHWAY NO.
CHK DWG:	0684	01	068	SH550

K:\CCRMA\SH 550\BRIDGES\Bridge Layouts\Brgloy*Overpass @ RRMP*NB.dgn

6/11/2024

Docusign Envelope ID: D24B0E46-A040-4DCF-9159-2076E4A3664D

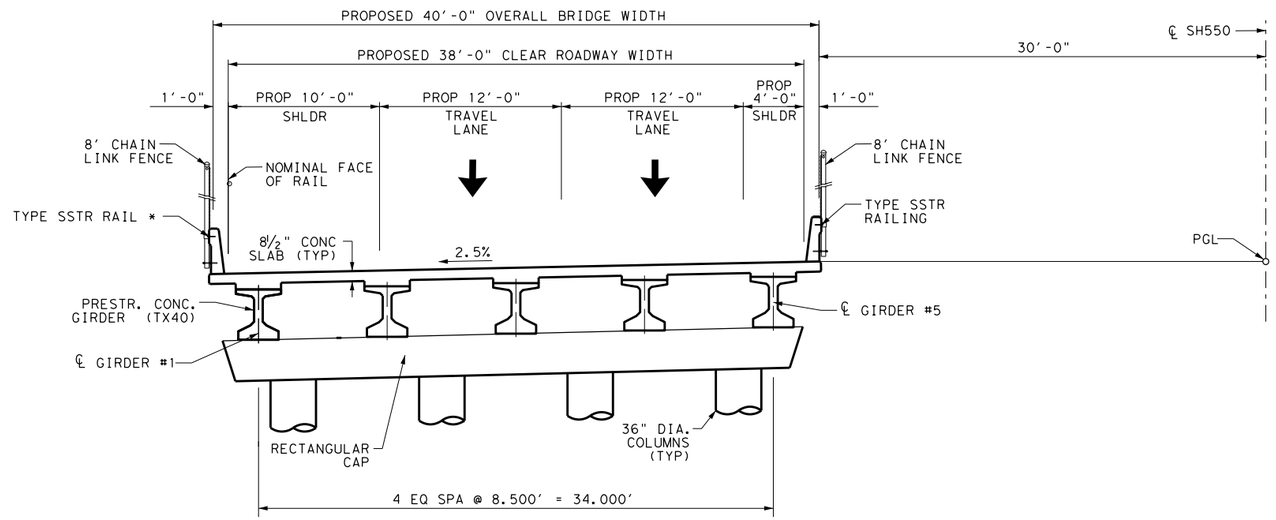

TYPICAL SECTION

N.T.S.

* NOTE: No Side Slot Drains On Bridge Rail.

HL93 LOADING

SH 550

TYPICAL SECTION

NB MAINLANE
UPRR#2 OVERPASS

RMA
CAMERON COUNTY REGIONAL MOBILITY AUTHORITY

L&G Engineering
Highway / Civil
Structural / Bridge
Environmental
Firm No. : F-4105

2100 N. Expressway 83
Mercedes, TX. 78570
Phone : (956) 565-6615
Fax : (956) 565-3016

900 S. Stewart Rd., Ste. 10
Mission, TX. 78572
Phone : (956) 585-1009
Fax : (956) 585-1027

STATE OF TEXAS
JORGE A. MADRIGAL
97243
LICENSED PROFESSIONAL ENGINEER
06/11/2024

DRAWING PREPARED BY: L&G ENGINEERING				
SHEET 1 OF 1				
FED. RD. DIV. NO.	FEDERAL AID PROJECT NO.			SHEET NO.
6				
DGN:	STATE	DIST.	COUNTY	
CHK DGN:	TEXAS	PHARR	CAMERON	
DWG:	CONT.	SECT.	JOB	HIGHWAY NO.
CHK DWG:	0684	01	068	SH550

6/11/2024 K:\CCRMA\SH 550\BRIDGES\Bridge Typical Sections\TypSec*FM 550*UPRR(NB).dgn

Docusign Envelope ID: D24B0E46-A040-4DCF-9159-2076E4A3664D

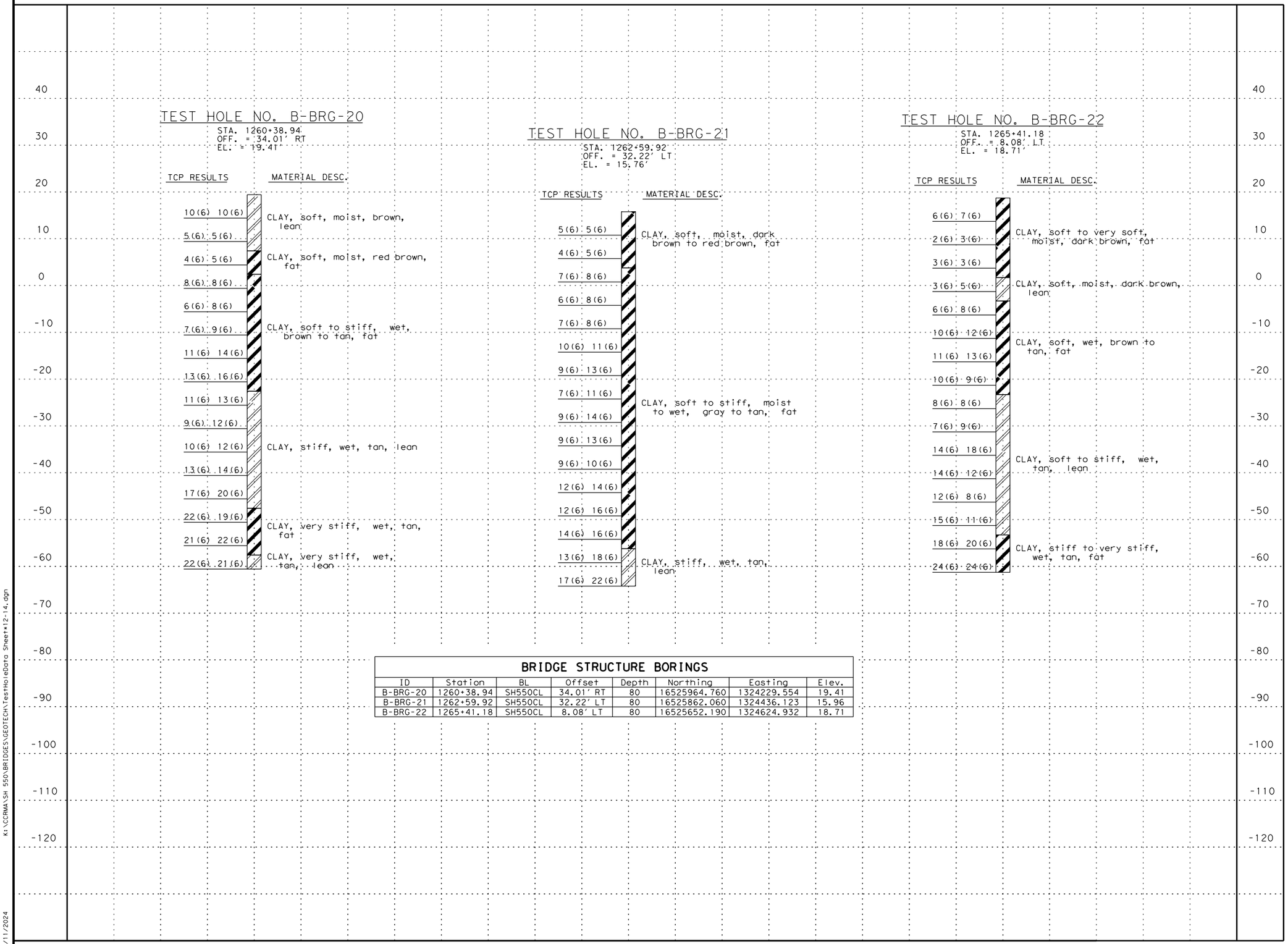

BRIDGE STRUCTURE BORINGS

ID	Station	BL	Offset	Depth	Northing	Easting	Elev.
B-BRG-20	1260+38.94	SH550CL	34.01' RT	80	16525964.760	1324229.554	19.41
B-BRG-21	1262+59.92	SH550CL	32.22' LT	80	16525862.060	1324436.123	15.96
B-BRG-22	1265+41.18	SH550CL	8.08' LT	80	16525652.190	1324624.932	18.71

GENERAL NOTES

1. TEST HOLE DATA Pprovided BY L&G ENGINEERING LABORATORY
2. TEST HOLE STATION, OFFSET AND ELEVATION ARE APPROXIMATE BASED ON FIELD MEASUREMENT

STATE OF TEXAS
JORGE A. MADRIGAL
97243
LICENSED PROFESSIONAL ENGINEER
06/11/2024

SH 550

TEST HOLE DATA SHEET

NB MAINLANE
UPRR #2 OVERPASS

RMA
CAMERON COUNTY REGIONAL MOBILITY AUTHORITY

L&G Engineering
Highway / Civil
Structural / Bridge
Environmental
Firm No. : F-4105

2790 W. Expressway 83
Mercedes, TX. 78570
Phone : (956) 565-9613
Fax : (956) 565-9618

955 S. Stewart Rd., Ste. 10
Mission, TX. 78572
Phone : (956) 585-1900
Fax : (956) 585-1927

DRAWING PREPARED BY: L&G ENG LAB

SHEET 1 OF 1

FED. RD. DIV. NO.	FEDERAL AID PROJECT NO.		SHEET NO.
6			

DGN:	STATE	DIST.	COUNTY	
CHK DGN:	TEXAS	PHARR	CAMERON	
DWG:	CONT.	SECT.	JOB	HIGHWAY NO.
CHK DWG:	0684	01	068	SH 550

K:\CCRMA\SH 550\BRIDGES\GEOTECH\TestHoleData Sheet+12-14.dgn

6/11/2024

Docusign Envelope ID: D24B0E46-A040-4DCF-9159-2076E4A3664D

SUMMARY OF ESTIMATED QUANTITIES

ITEM NO.	400	409	420	420	420	422	425	432	450	454	644	
DESC. CODE	6005	6001	6013	6025	6049	6001	6037	6001	6023	6018	6065	
BID ITEM DESCRIPTION	CEMENT STABILIZED BACKFILL	PRESTR CONC PILE (16 IN SQ) (SULF)	CLASS "C" CONCRETE			REINFORCED CONCRETE SLAB	PRESTRESSED CONCRETE GIRDER	RIP RAP (CONC)	RAILING	SEALED EXPANSION JOINT	BRIDGE MNT CLEARANCE SIGN	
BRIDGE ELEMENT			ABUT	BENT	CRASH WALL	CLASS "S"	Tx40	(4 IN)	TY SSTR	(4") (SEJ-M)	(TY S)	
	CY	LF	CY	CY	CY	SF	LF	CY	LF	LF	EA	
2 ~ ABUTMENTS	236	1788	76.8						64	166.5		
4 ~ INTERIOR BENTS		2944		311.9	101.0							
1 ~ 260.00' PRESTR CONC GIRDER UNIT						10,400	1,391.40		520			
1 ~ 160.00' PRESTR CONC GIRDER UNIT						6,400	794.40		320			
TOTAL	236	4732	76.8	311.9	101.0	16,800	2185.80	250	904	166.5	1	

BEARING SEAT ELEVATIONS

	BEAM 1	BEAM 2	BEAM 3	BEAM 4	BEAM 5	BEAM 6
BENT 1 (FWD)	40.040	40.204	40.365	40.524	40.680	
BENT 2 (BK)	40.355	40.539	40.722	40.901	41.078	
(FWD)	40.360	40.546	40.728	40.909	41.086	
BENT 3 (BK)	40.492	40.698	40.902	41.104	41.303	
(FWD)	40.472	40.638	40.802	40.965	41.126	41.285
BENT 4 (BK)	40.376	40.563	40.748	40.932	41.114	41.295
(FWD)	40.392	40.626	40.857	41.086	41.313	
BENT 5 (BK)	40.107	40.362	40.615	40.865	41.113	
(FWD)	40.097	40.353	40.606	40.857	41.105	
BENT 6 (BK)	39.630	39.907	40.181	40.453	40.723	

STATE OF TEXAS
JORGE A. MADRIGAL
97243
LICENSED PROFESSIONAL ENGINEER
06/11/2024

SH 550

ESTIMATED QUANTITIES & BEARING SEAT ELEVATIONS

NB MAINLANE UPPR #2 OVERPASS

RMA CAMERON COUNTY REGIONAL MOBILITY AUTHORITY

L&G Engineering
Highway / Civil
Structural / Bridge
Environmental
Firm No. : F-4105

2100 W. Expressway 83
Mercedes, TX. 78570
Phone : (956) 565-3613
Fax : (956) 565-3618

905 S. Stewart Rd., Ste. 10
Mission, TX. 78572
Phone : (956) 585-1909
Fax : (956) 585-1927

DRAWING PREPARED BY: L&G ENGINEERING

SHEET 1 OF 1

FED. RD. DIV. NO.	FEDERAL AID PROJECT NO.		SHEET NO.
6			

DGN:	STATE	DIST.	COUNTY	
CHK DGN:	TEXAS	PHARR	CAMERON	
DWG:	CONT.	SECT.	JOB	HIGHWAY NO.
CHK DWG:	0684	01	068	SH550

K:\CCRMA\SH 550\BRIDGES\Quantities\SH550UPRNB#BridgE&Q.dgn

6/11/2024

Docusign Envelope ID: D24B0E46-A040-4DCF-9159-2076E4A3664D

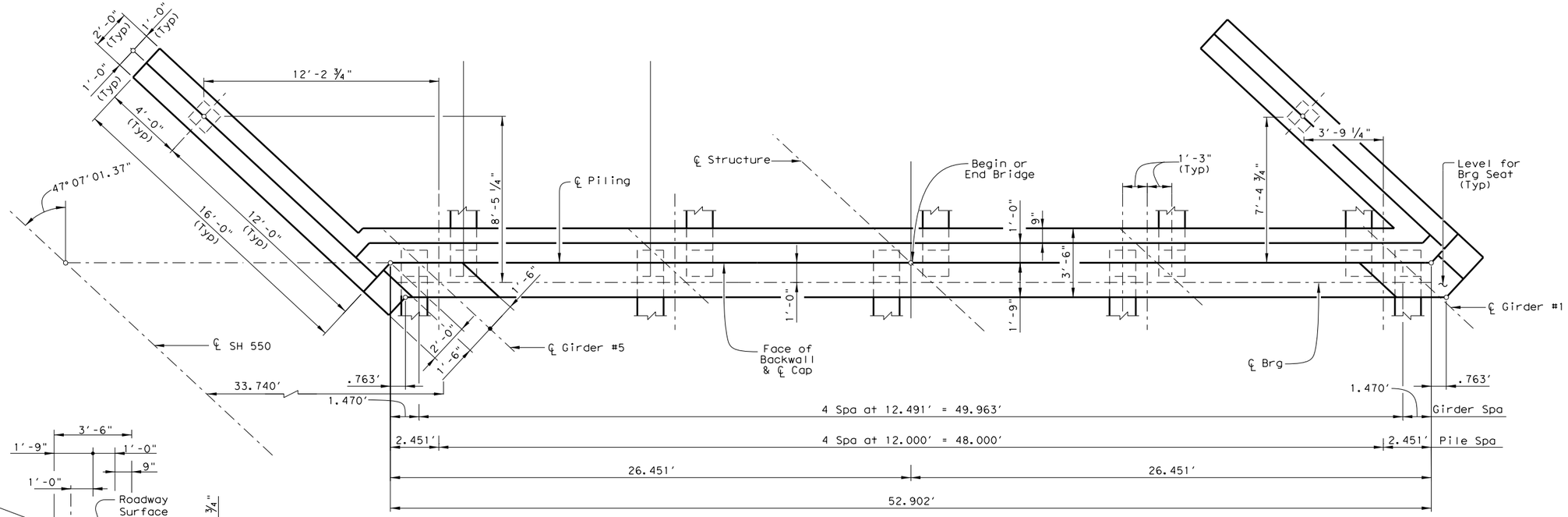

PLAN

(Showing Abut. No.1, Abut. No. 6 Opposite Hand)

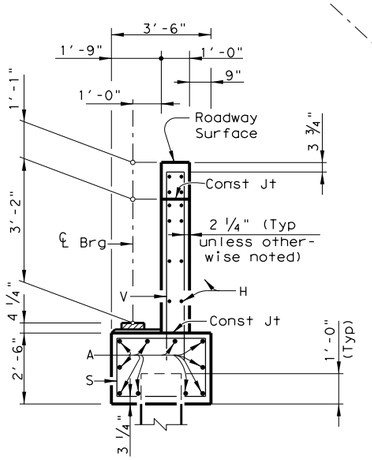

SECTION A-A

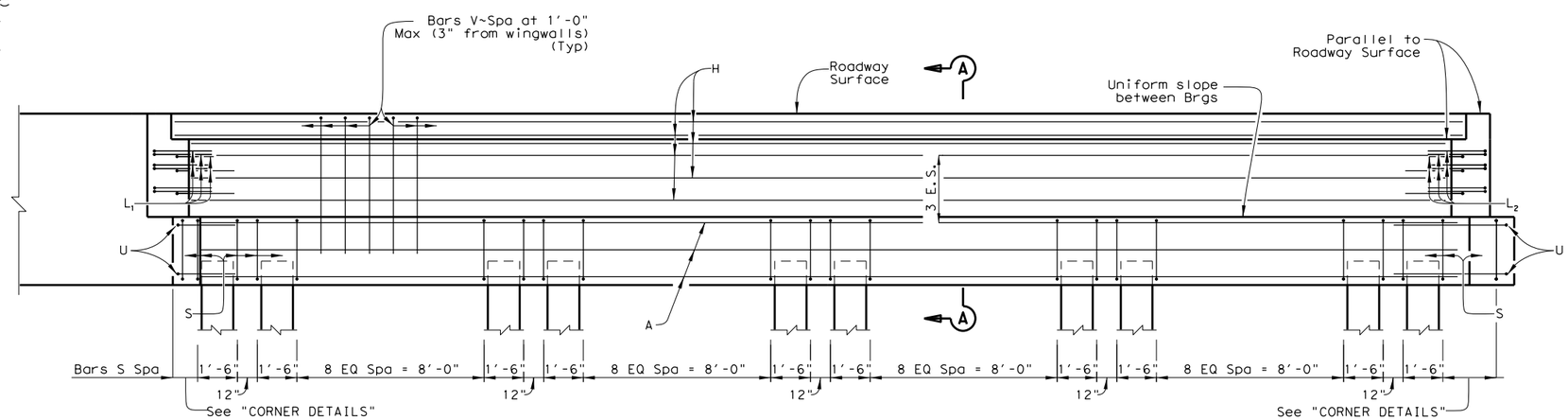

ELEVATION

STATE OF TEXAS
JORGE A. MADRIGAL
97243
LICENSED PROFESSIONAL ENGINEER
06/11/2024

HL93 LOADING

SH 550

ABUTMENTS NO. 1 & 6

NB MAINLANE
UPRR #2 OVERPASS

RMA
CAMERON COUNTY REGIONAL MOBILITY AUTHORITY

L&G Engineering
Highway / Civil
Structural / Bridge
Environmental
Firm No. : F-4105

2100 W. Expressway 83
Weslaco, TX. 78596
Phone : (956) 565-6013
Fax : (956) 565-6018

940 S. Stewart Rd., Ste. 10
Mission, TX. 78572
Phone : (956) 585-1909
Fax : (956) 585-1927

DRAWING PREPARED BY: L&G ENGINEERING

SHEET 3 OF 10

FED. RD. DIV. NO.	FEDERAL AID PROJECT NO.		SHEET NO.
6			

DGN:	STATE	DIST.	COUNTY	
CHK DGN:	TEXAS	PHARR	CAMERON	
DWG:	CONT.	SECT.	JOB	HIGHWAY NO.
CHK DWG:	0684	01	068	SH550

K:\CCRMA\SH 550\BRIDGES\Abutments\UPRR\NB\Abut#OverpassNBML01 @ UPRR.dgn

6/11/2024

Docusign Envelope ID: D24B0E46-A040-4DCF-9159-2076E4A3664D

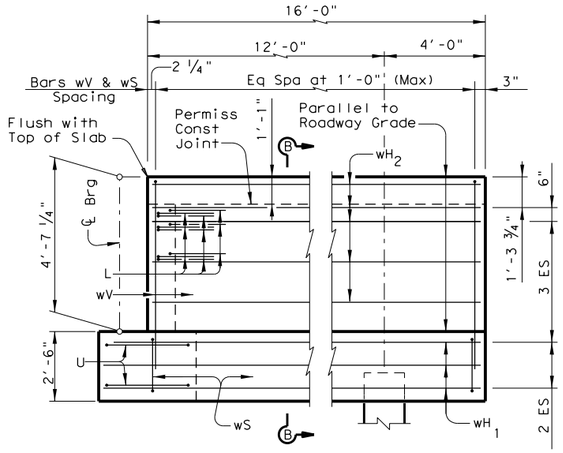

WINGWALL ELEVATION

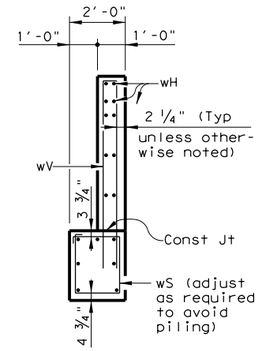

SECTION B-B

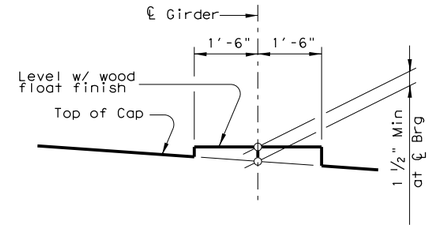

BEARING SEAT DETAIL

(Bearing surface must be clean and free of all loose material before placing bearing pad.)

① TABLE OF ESTIMATED QUANTITIES

Bar	No.	Size	Length	Weight
A	10	#11	52' -11"	2811
H	12	#6	52' -11"	954
L1	9	#6	6'-1"	82
L2	9	#6	5'-7 3/4"	76
S	50	#5	11'-4"	591
U	4	#6	11'-5 1/2"	69
V	56	#5	11' -9 1/2"	689
wH1	14	#6	17' -5"	366
wH2	20	#6	15' -8"	471
wS	34	#4	7' -8"	174
wV	34	#5	12' -0 1/2"	427
Reinforcing Steel			Lb	6710
Class "C" Concrete			CY	38.4

① Quantities shown are for one(1) Abutment only.

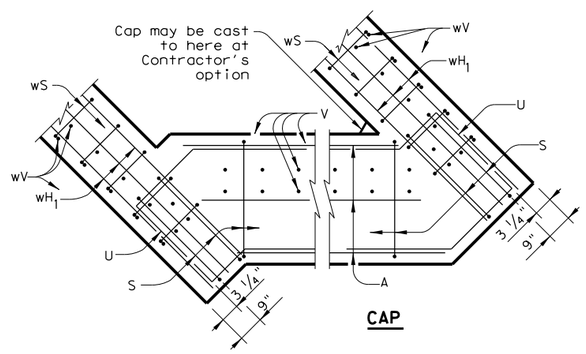

CAP

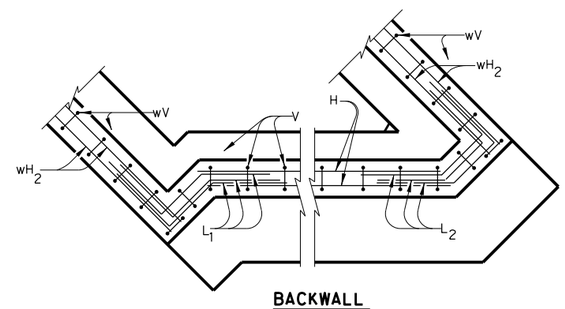

BACKWALL

CORNER DETAILS

GENERAL NOTES:

Designed according to AASHTO LRFD Bridge Design Specifications.
See Common Foundation Details (FD) standard sheet for all foundation details and notes.
See Concrete Riprap (CRR) standard sheet or Stone Riprap (SRR) standard sheet for riprap attachment details, if applicable.
See applicable rail details for rail anchorage in wingwalls.

Cover dimensions are clear dimensions, unless noted otherwise.
Reinforcing bar dimensions shown are out-to-out of bar.

MATERIAL NOTES:

Provide Class C concrete (f'c=3,600 psi).
Provide Grade 60 reinforing steel.
Galvanize dowel bars D.

Calculated Foundation Load = 56 tons/pile

HL93 LOADING

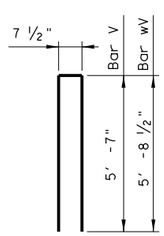

BARS V & wV

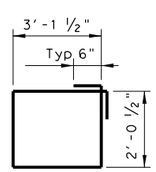

BARS S

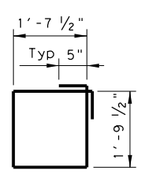

BARS wS

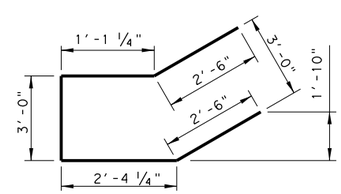

BARS U

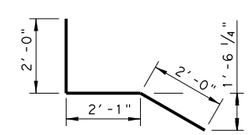

BARS L_1

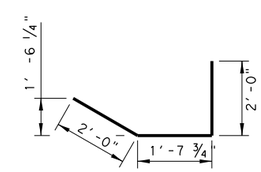

BARS L_2

STATE OF TEXAS
JORGE A. MADRIGAL
97243
LICENSED PROFESSIONAL ENGINEER
06/11/2024

SH 550

ABUTMENTS NO. 1 & 6

NB MAINLANE
UPRR #2 OVERPASS

RMA
CAMERON COUNTY REGIONAL MOBILITY AUTHORITY

L&G Engineering
Highway / Civil
Structural / Bridge
Environmental
Firm No. : F-4105
8100 W. Expressway 83
Mercedes, TX. 78570
Phone : (956) 565-0613
Fax : (956) 565-9018
905 S. Stewart Rd., Ste. 10
Mission, TX. 78572
Phone : (956) 585-1909
Fax : (956) 585-1921

DRAWING PREPARED BY: L&G ENGINEERING

SHEET 4 OF 10

FED. RD. DIV. NO.	FEDERAL AID PROJECT NO.		SHEET NO.
6			

DGN:	STATE	DIST.	COUNTY
CHK DGN:	TEXAS	PHARR	CAMERON
DWG:	CONT.	SECT.	JOB	HIGHWAY NO.
CHK DWG:	0684	01	068	SH550

K:\CCRMA\SH 550\BRIDGES\Abutments\UPRR#NB\Abut+OverpassNBML02 @ UPPR.dgn

6/11/2024

Docusign Envelope ID: D24B0E46-A040-4DCF-9159-2076E4A3664D

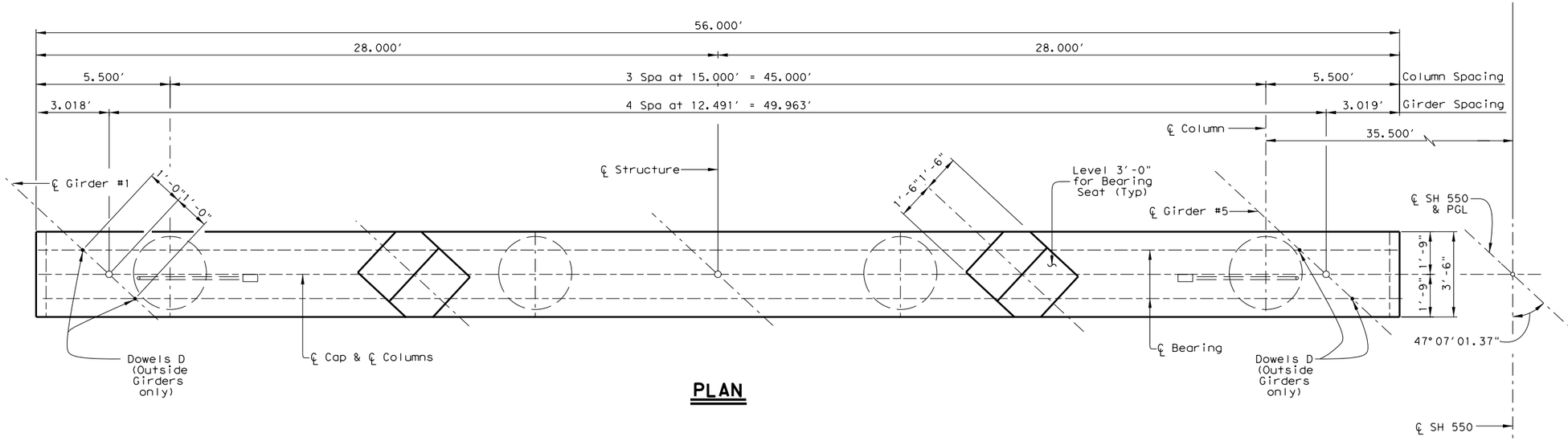

PLAN

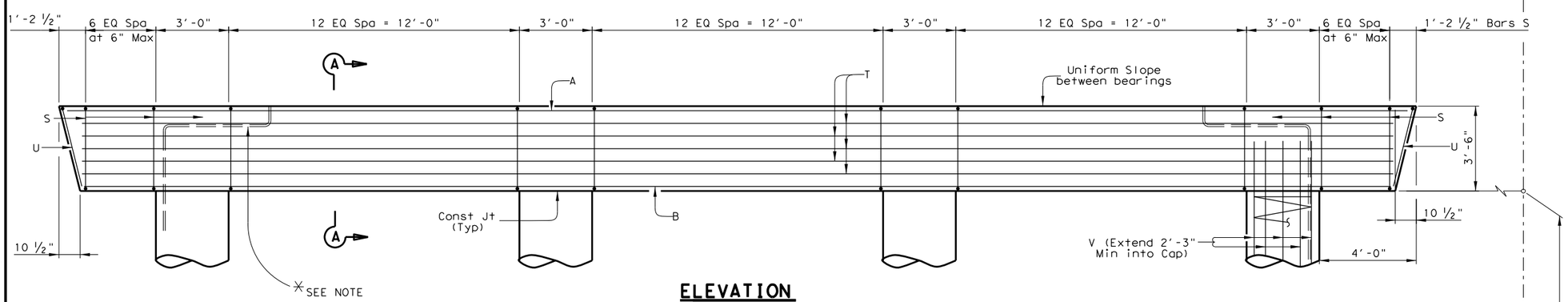

ELEVATION

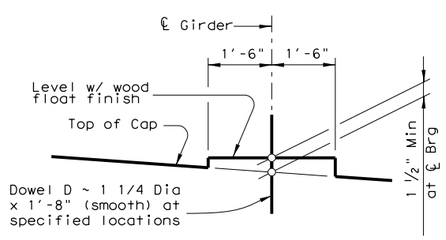

BEARING SEAT DETAIL

(Bearing surface must be clean and free of all loose material before placing bearing pad.)

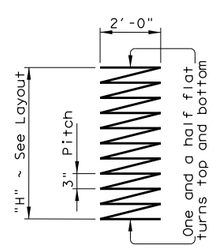

BARS Z

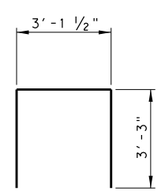

BARS U

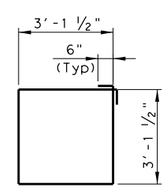

BARS S

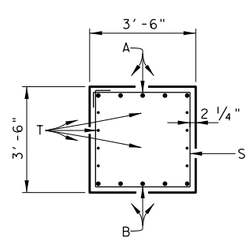

SECTION A-A

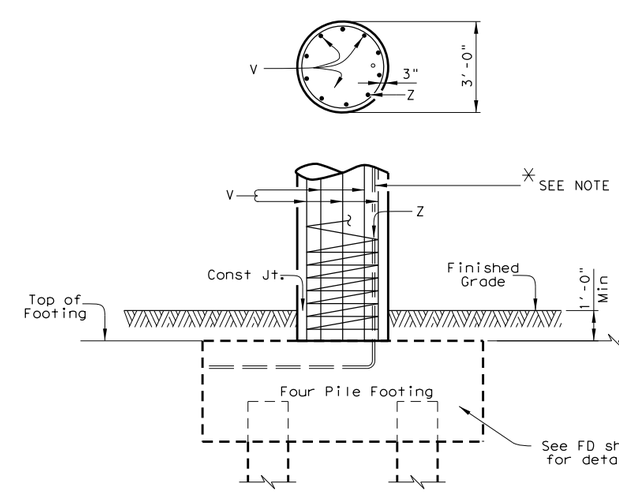

✳ Maintain 1" clear distance from reinforcement. See Underpass Illumination Plan Layout Sheet for additional details.

① TABLE OF ESTIMATED QUANTITIES

Bar	No.	Size	Length	Weight
A	5	#11	55'-8"	1479
B	5	#11	53'-9"	1428
D	4	#9	1'-8"	23
S	53	#5	13'-6"	746
T	8	#5	53'-9"	448
U	2	#5	9'-7 ½"	20
V	40	#9	26'-3"	3570
Z	4	#3	777'-7"	1169
Reinforcing Steel			Lb	8883
Class "C" Concrete (Cap)			CY	25.3
Class "C" Concrete (Col)②			CY	25.1
Class "C" Concrete (Ftg)			CY	25.2
Class "C" Concrete Total			CY	75.6

① Quantities shown are for Bent #2 (H=24')

② For each linear foot variation in "H" value, make the following adjustments:
Bars V length, 1'-0"
Bars Z length, 31'-5"
Reinforcing Steel, 165 Lb
Class "C" Conc. (Col), 1.047 CY

GENERAL NOTES:

Designed according to AASHTO LRFD Bridge Design Specifications.
See Bridge layout for foundation type, size and length.
See Common Foundation Details (FD) standard sheet for all foundation details and notes.

Cover dimensions are clear dimensions, unless noted otherwise.
Reinforcing bar dimensions shown are out-to-out of bar.

MATERIAL NOTES:

Provide Class C concrete (f'c=3,600 psi).
Provide Grade 60 reinforing steel.
Galvanize dowel bars D.

Calculated Foundation Loads = 40 tons/pile

HL93 LOADING

SH 550

INTERIOR BENT Nos. 2 & 5

NB MAINLANE
UPRR #2 OVERPASS

RMA CAMERON COUNTY REGIONAL MOBILITY AUTHORITY

L&G Engineering
Highway / Civil
Structural / Bridge
Environmental
Firm No. : F-4105
2100 W. Expressway 83
Mercedes, TX. 78570
Phone : (956) 565-6013
Fax : (956) 565-5018
905 S. Stewart Rd., Ste. 10
Mission, TX. 78572
Phone : (956) 585-1009
Fax : (956) 585-1927

STATE OF TEXAS
JORGE A. MADRIGAL
97243
LICENSED PROFESSIONAL ENGINEER
06/11/2024

DRAWING PREPARED BY: L&G ENGINEERING				
SHEET 1 OF 1				
FED. RD. DIV. NO.	FEDERAL AID PROJECT NO.			SHEET NO.
6				
DGN:	STATE	DIST.	COUNTY	
CHK DGN:	TEXAS	PHARR	CAMERON	
DWG:	CONT.	SECT.	JOB	HIGHWAY NO.
CHK DWG:	0684	01	068	SH550

K:\CCRMA\SH 550\BRIDGES\Bents\UPRR(NB)\SH550+BentDet+UPRR285+NBML+01.dgn

6/11/2024

Docusign Envelope ID: D24B0E46-A040-4DCF-9159-2076E4A3664D

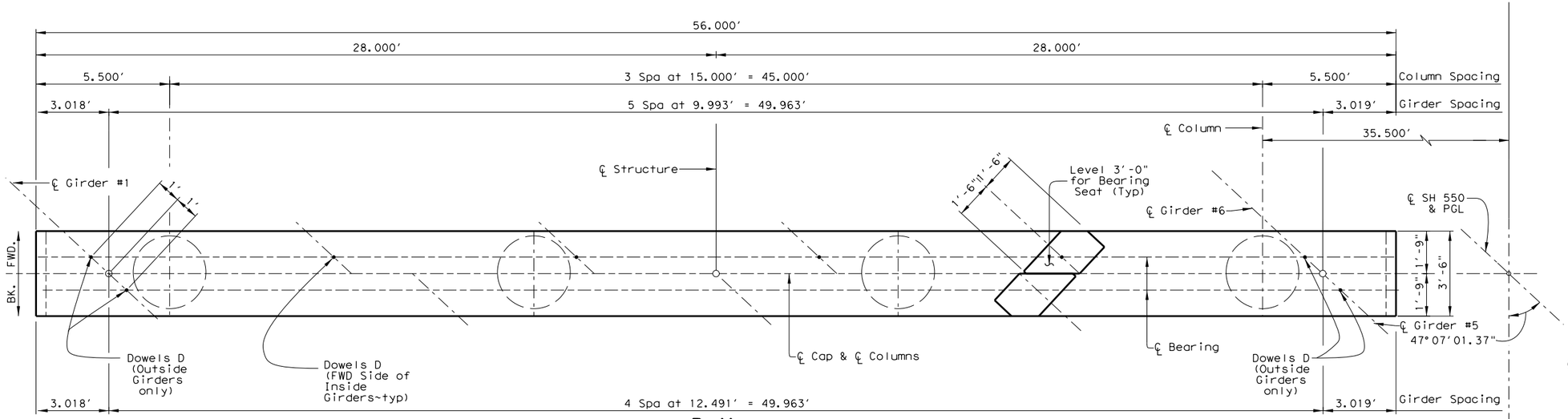

PLAN

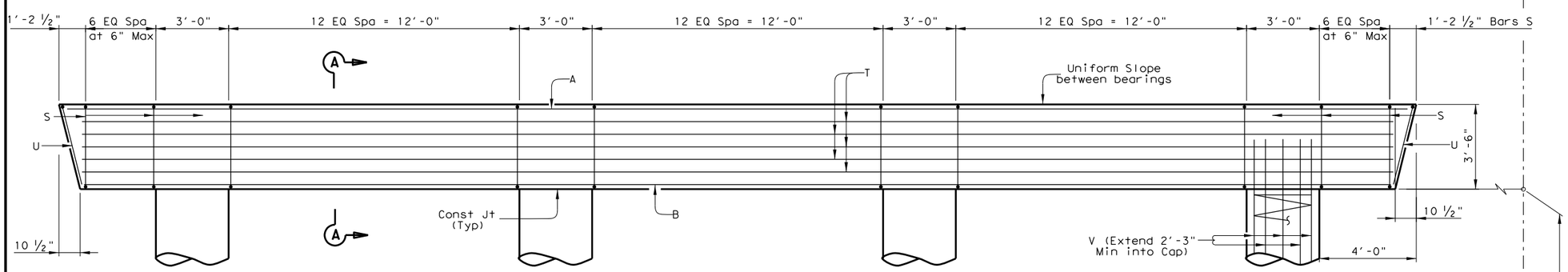

ELEVATION

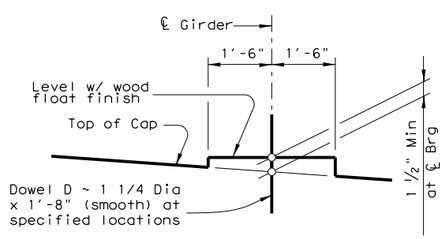

BEARING SEAT DETAIL

(Bearing surface must be clean and free of all loose material before placing bearing pad.)

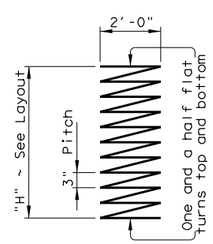

BARS Z

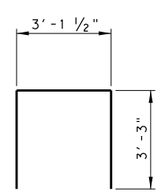

BARS U

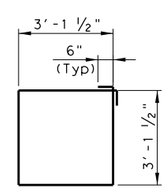

BARS S

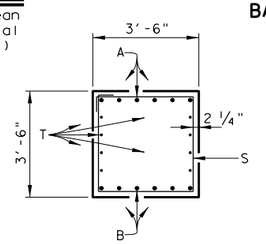

SECTION A-A

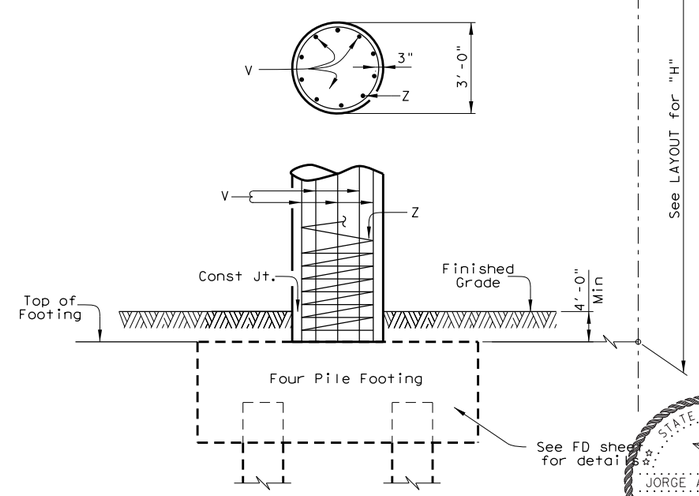

TABLE OF ESTIMATED QUANTITIES

Bar	No.	Size	Length	Weight
A	6	#11	55'-8"	1775
B	6	#11	53'-9"	1713
D	8	#9	1'-8"	45
S	53	#5	13'-6"	746
T	8	#5	53'-9"	448
U	2	#5	9'-7 ½"	20
V	40	#9	30'-3"	4114
Z	4	#3	903'-3"	1358

Reinforcing Steel	Lb	10219
Class "C" Concrete (Cap)	CY	25.3
Class "C" Concrete (Col) ①	CY	29.3
Class "C" Concrete (Ftg)	CY	25.2
Class "C" Concrete Total	CY	79.8

① For each linear foot variation in "H" value, make the following adjustments:
Bars V length, 1'-0"
Bars Z length, 31'-5"
Reinforcing Steel, 165 Lb
Class "C" Conc. (Col), 1.047 CY

GENERAL NOTES:

Designed according to AASHTO LRFD Bridge Design Specifications.
See Bridge layout for foundation type, size and length.
See Common Foundation Details (FD) standard sheet for all foundation details and notes.

Cover dimensions are clear dimensions, unless noted otherwise.
Reinforcing bar dimensions shown are out-to-out of bar.

MATERIAL NOTES:

Provide Class C concrete (f'c=3,600 psi).
Provide Grade 60 reinforing steel.
Galvanize dowel bars D.

Calculated Foundation Load = 48 tons/pile

HL93 LOADING

SH 550

INTERIOR BENT No. 3

NB MAINLANE
UPRR #2 OVERPASS

RMA CAMERON COUNTY REGIONAL MOBILITY AUTHORITY

L&G Engineering
Highway / Civil
Structural / Bridge
Environmental
Firm No. : F-4105
2100 W. Expressway 83
Mercedes, TX. 78570
Phone : (956) 565-6013
Fax : (956) 565-5018
905 S. Stewart Rd., Ste. 10
Mission, TX. 78572
Phone : (956) 585-1909
Fax : (956) 585-1927

STATE OF TEXAS
JORGE A. MADRIGAL
97243
LICENSED PROFESSIONAL ENGINEER
06/11/2024

DRAWING PREPARED BY: L&G ENGINEERING			
SHEET 1 OF 1			
FED. RD. DIV. NO.	FEDERAL AID PROJECT NO.		SHEET NO.
6			
DGN:	STATE	DIST.	COUNTY
CHK DGN:	TEXAS	PHARR	CAMERON
DWG:	CONT.	SECT.	JOB	HIGHWAY NO.
CHK DWG:	0684	01	068	SH550

K:\CCRMA\SH 550\BRIDGES\Bents\UPRR(NB)\SH550*Bent*Det*UPRR3*NBML*01.dgn

6/11/2024

Docusign Envelope ID: D24B0E46-A040-4DCF-9159-2076E4A3664D

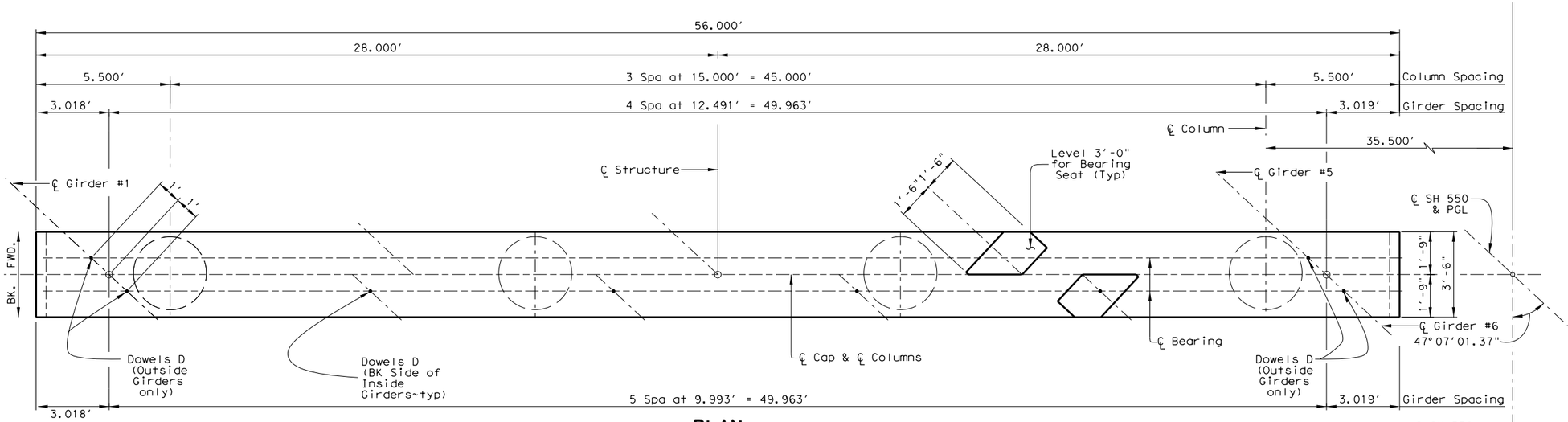

PLAN

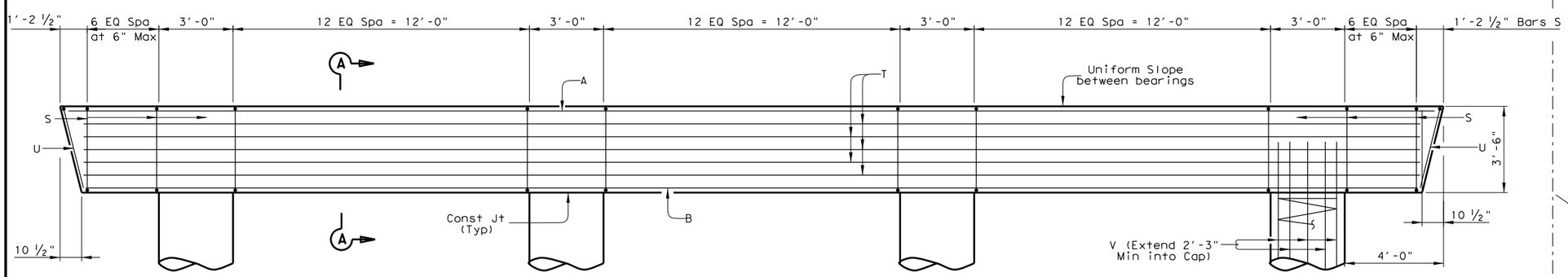

ELEVATION

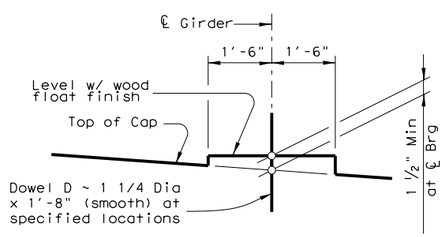

BEARING SEAT DETAIL

(Bearing surface must be clean and free of all loose material before placing bearing pad.)

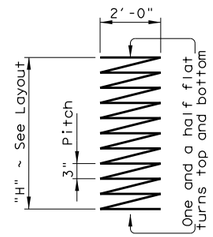

BARS Z

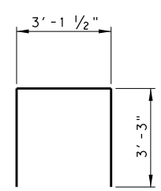

BARS U

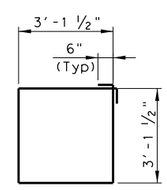

BARS S

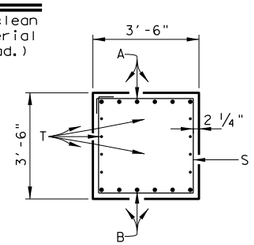

SECTION A-A

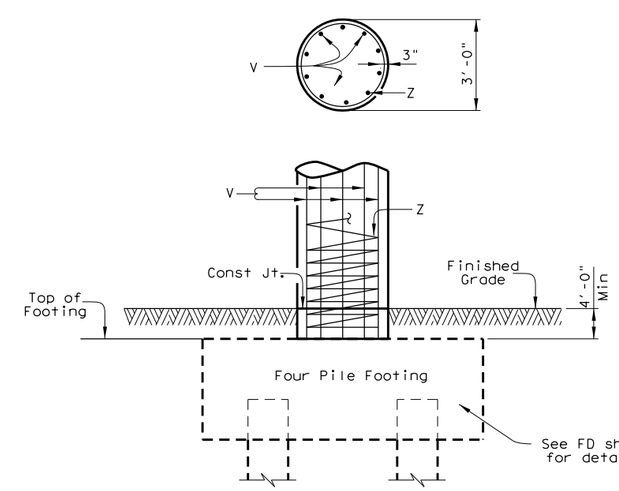

TABLE OF ESTIMATED QUANTITIES

Bar	No.	Size	Length	Weight
A	6	#11	55'-8"	1775
B	6	#11	53'-9"	1713
D	8	#9	1'-8"	45
S	53	#5	13'-6"	746
T	8	#5	53'-9"	448
U	2	#5	9'-7 ½"	20
V	40	#9	31'-3"	4250
Z	4	#3	934'-8"	1406

Reinforcing Steel	Lb	10403
Class "C" Concrete (Cap)	CY	25.3
Class "C" Concrete (Col) ①	CY	30.4
Class "C" Concrete (Ftg)	CY	25.2
Class "C" Concrete Total	CY	80.9

① For each linear foot variation in "H" value, make the following adjustments:
Bars V length, 1'-0"
Bars Z length, 31'-5"
Reinforcing Steel, 165 Lb
Class "C" Conc. (Col), 1.047 CY

GENERAL NOTES:

Designed according to AASHTO LRFD Bridge Design Specifications.
See Bridge layout for foundation type, size and length.
See Common Foundation Details (FD) standard sheet for all foundation details and notes.

Cover dimensions are clear dimensions, unless noted otherwise.
Reinforcing bar dimensions shown are out-to-out of bar.

MATERIAL NOTES:

Provide Class C concrete (f'c=3,600 psi).
Provide Grade 60 reinforing steel.
Galvanize dowel bars D.

Calculated Foundation Load = 48 tons/pile

HL93 LOADING

SH 550

INTERIOR BENT No. 4

NB MAINLANE
UPRR #2 OVERPASS

RMA
CAMERON COUNTY REGIONAL MOBILITY AUTHORITY

L&G Engineering
Highway / Civil
Structural / Bridge
Environmental
Firm No. : F-4105
2100 W. Expressway 83
Mercedes, TX. 78570
Phone : (956) 565-6013
Fax : (956) 565-9018
905 S. Stewart Rd., Ste. 10
Mission, TX. 78572
Phone : (956) 585-1009
Fax : (956) 585-1927

STATE OF TEXAS
JORGE A. MADRIGAL
97243
LICENSED PROFESSIONAL ENGINEER
06/11/2024

DRAWING PREPARED BY: L&G ENGINEERING				
SHEET 1 OF 1				
FED. RD. DIV. NO.	FEDERAL AID PROJECT NO.			SHEET NO.
6				
DGN:	STATE	DIST.	COUNTY	
CHK DGN:	TEXAS	PHARR	CAMERON	
DWG:	CONT.	SECT.	JOB	HIGHWAY NO.
CHK DWG:	0684	01	068	SH550

K:\CCRMA\SH 550\BRIDGES\Bents\UPRR(NB)\SH550*Bent*Det*UPRR4*NBML*01.dgn

6/11/2024

Docusign Envelope ID: D24B0E46-A040-4DCF-9159-2076E4A3664D

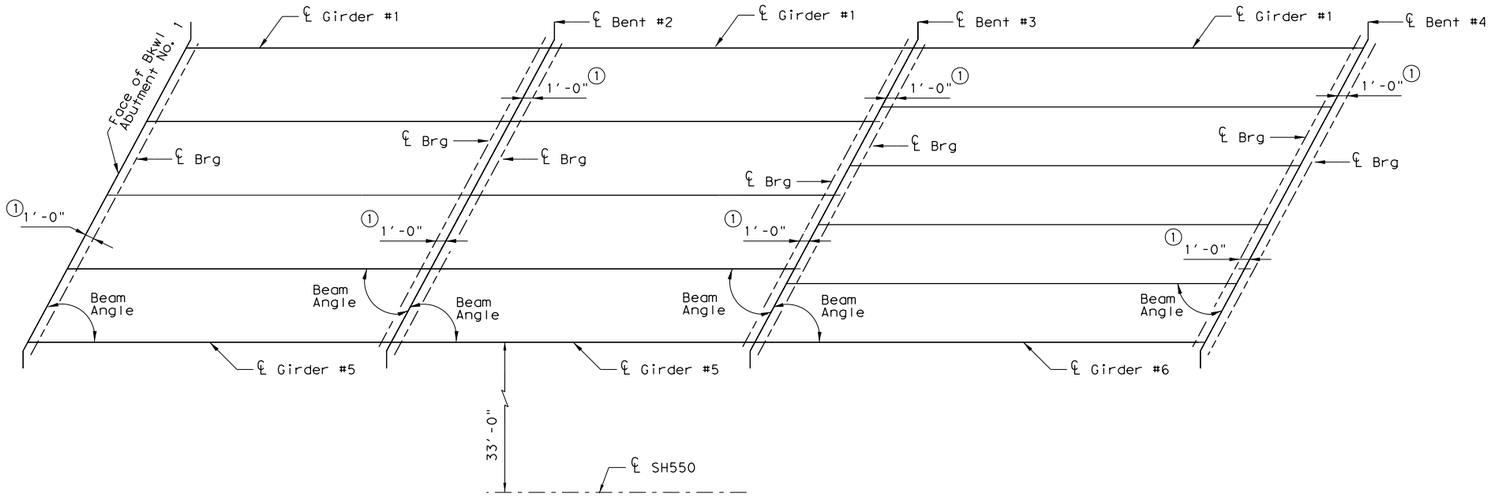

SPAN 1

(Type Tx40 Girder)

BENT REPORT

BENT NO. 1 (S 89 45 52.68 E)
DISTANCE BETWEEN STATION LINE AND BEAM 1, 98.457 L

		BEAM SPAC. (C.L. BENT)	BEAM ANGLE D M S
SPAN 1	BEAM 1	0.000	42 52 59
	BEAM 2	12.491	42 52 59
	BEAM 3	12.491	42 52 59
	BEAM 4	12.491	42 52 59
	BEAM 5	12.491	42 52 59
	TOTAL	49.963	

BENT NO. 2 (S 89 45 52.68 E)
DISTANCE BETWEEN STATION LINE AND BEAM 1, 98.457 L

		BEAM SPAC. (C.L. BENT)	BEAM ANGLE D M S
SPAN 1	BEAM 1	0.000	42 52 59
	BEAM 2	12.491	42 52 59
	BEAM 3	12.491	42 52 59
	BEAM 4	12.491	42 52 59
	BEAM 5	12.491	42 52 59
	TOTAL	49.963	

BEAM REPORT

BEAM REPORT, SPAN 1

	HORIZONTAL DISTANCE C-C BENT	C-C BRG.	TRUE DISTANCE② BOT. BM. FLG.	BEAM SLOPE
BEAM 1	80.000	77.530	79.38	0.0041
BEAM 2	80.000	77.530	79.38	0.0043
BEAM 3	80.000	77.530	79.38	0.0046
BEAM 4	80.000	77.530	79.38	0.0049
BEAM 5	80.000	77.530	79.38	0.0051

SPAN 2

(Type Tx40 Girder)

BENT REPORT

BENT NO. 2 (S 89 45 52.68 E)
DISTANCE BETWEEN STATION LINE AND BEAM 1, 98.457 L

		BEAM SPAC. (C.L. BENT)	BEAM ANGLE D M S
SPAN 2	BEAM 1	0.000	42 52 59
	BEAM 2	12.491	42 52 59
	BEAM 3	12.491	42 52 59
	BEAM 4	12.491	42 52 59
	BEAM 5	12.491	42 52 59
	TOTAL	49.963	

BENT NO. 3 (S 89 45 52.68 E)
DISTANCE BETWEEN STATION LINE AND BEAM 1, 98.457 L

		BEAM SPAC. (C.L. BENT)	BEAM ANGLE D M S
SPAN 2	BEAM 1	0.000	42 52 59
	BEAM 2	12.491	42 52 59
	BEAM 3	12.491	42 52 59
	BEAM 4	12.491	42 52 59
	BEAM 5	12.491	42 52 59
	TOTAL	49.963	

BEAM REPORT

BEAM REPORT, SPAN 2

	HORIZONTAL DISTANCE C-C BENT	C-C BRG.	TRUE DISTANCE② BOT. BM. FLG.	BEAM SLOPE
BEAM 1	80.000	78.000	79.50	0.0017
BEAM 2	80.000	78.000	79.50	0.0020
BEAM 3	80.000	78.000	79.50	0.0022
BEAM 4	80.000	78.000	79.50	0.0025
BEAM 5	80.000	78.000	79.50	0.0028

SPAN 3

(Type Tx40 Girder)

BENT REPORT

BENT NO. 3 (S 89 45 52.68 E)
DISTANCE BETWEEN STATION LINE AND BEAM 1, 98.457 L

		BEAM SPAC. (C.L. BENT)	BEAM ANGLE D M S
SPAN 3	BEAM 1	0.000	42 52 59
	BEAM 2	9.993	42 52 59
	BEAM 3	9.993	42 52 59
	BEAM 4	9.993	42 52 59
	BEAM 5	9.993	42 52 59
	BEAM 6	9.993	42 52 59
	TOTAL	49.963	

BENT NO. 4 (S 89 45 52.68 E)
DISTANCE BETWEEN STATION LINE AND BEAM 1, 98.457 L

		BEAM SPAC. (C.L. BENT)	BEAM ANGLE D M S
SPAN 3	BEAM 1	0.000	42 52 59
	BEAM 2	9.993	42 52 59
	BEAM 3	9.993	42 52 59
	BEAM 4	9.993	42 52 59
	BEAM 5	9.993	42 52 59
	BEAM 6	9.993	42 52 59
	TOTAL	49.963	

BEAM REPORT

BEAM REPORT, SPAN 3

	HORIZONTAL DISTANCE C-C BENT	C-C BRG.	TRUE DISTANCE② BOT. BM. FLG.	BEAM SLOPE
BEAM 1	100.000	98.000	99.50	-0.0010
BEAM 2	100.000	98.000	99.50	-0.0008
BEAM 3	100.000	98.000	99.50	-0.0005
BEAM 4	100.000	98.000	99.50	-0.0003
BEAM 5	100.000	98.000	99.50	-0.0001
BEAM 6	100.000	98.000	99.50	0.0001

①See IGEB Standard for orientation of dimension.

②Girder lengths shown are bottom flange lengths with adjustments made for beam slope.

HL93 LOADING

SH 550

GIRDER LAYOUT SPANS #1-3

NB MAINLANE
UPRR #2 OVERPASS

STATE OF TEXAS
JORGE A. MADRIGAL
97243
LICENSED PROFESSIONAL ENGINEER
06/11/2024

RMA
CAMERON COUNTY REGIONAL MOBILITY AUTHORITY

L&G Engineering
Highway / Civil
Structural / Bridge
Environmental
Firm No. : F-4105
2100 W. Expressway 83
Harlingen, TX. 78550
Phone : (956) 595-0813
Fax : (956) 595-8018
903 S. Stewart Rd., Ste. 10
Mission, TX. 78572
Phone : (956) 585-1909
Fax : (956) 585-1927

DRAWING PREPARED BY: L&G ENGINEERING				
SHEET 1 OF 1				
FED. RD. DIV. NO.	FEDERAL AID PROJECT NO.			SHEET NO.
6				
DGN:	STATE	DIST.	COUNTY	
CHK DGN:	TEXAS	PHARR	CAMERON	
DWG:	CONT.	SECT.	JOB	HIGHWAY NO.
CHK DWG:	0684	01	068	SH550

K:\CCRMA\SH 550\BRIDGES\Girder Layouts\GirderLayout*SH550*UPRR(NB).dgn

6/11/2024

Docusign Envelope ID: D24B0E46-A040-4DCF-9159-2076E4A3664D

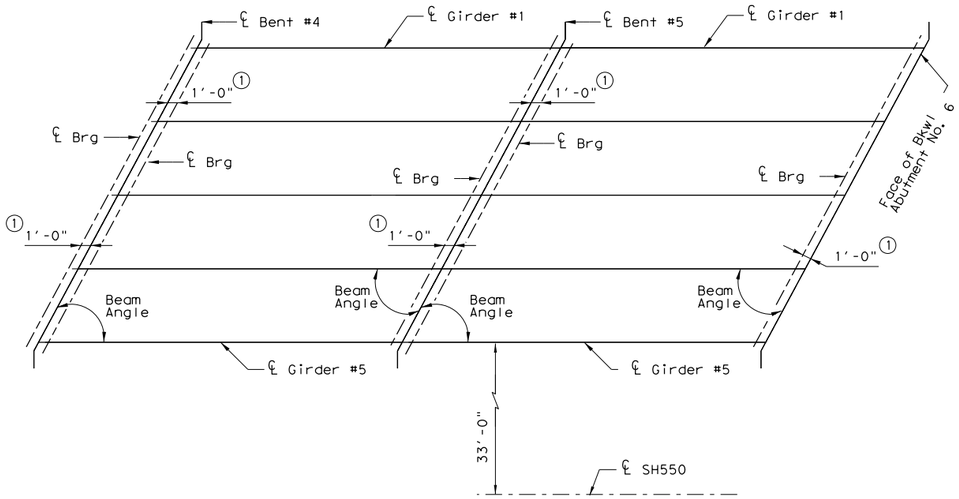

SPAN 4

(Type Tx40 Girder)

BENT REPORT

BENT NO. 4 (S 89 45 52.68 E)
DISTANCE BETWEEN STATION LINE AND BEAM 1, 98.457 L

		BEAM SPAC. (C.L. BENT)	BEAM ANGLE D M S
SPAN 4	BEAM 1	0.000	42 52 59
	BEAM 2	12.491	42 52 59
	BEAM 3	12.491	42 52 59
	BEAM 4	12.491	42 52 59
	BEAM 5	12.491	42 52 59
	TOTAL	49.963	

BENT NO. 5 (S 89 45 52.68 E)
DISTANCE BETWEEN STATION LINE AND BEAM 1, 98.457 L

		BEAM SPAC. (C.L. BENT)	BEAM ANGLE D M S
SPAN 4	BEAM 1	0.000	42 52 59
	BEAM 2	12.491	42 52 59
	BEAM 3	12.491	42 52 59
	BEAM 4	12.491	42 52 59
	BEAM 5	12.491	42 52 59
	TOTAL	49.963	

BEAM REPORT

BEAM REPORT, SPAN 4

	HORIZONTAL DISTANCE C-C BENT	C-C BRG.	TRUE DISTANCE② BOT. BM. FLG.	BEAM SLOPE
BEAM 1	80.000	78.000	79.50	-0.0037
BEAM 2	80.000	78.000	79.50	-0.0034
BEAM 3	80.000	78.000	79.50	-0.0031
BEAM 4	80.000	78.000	79.50	-0.0028
BEAM 5	80.000	78.000	79.50	-0.0026

SPAN 5

(Type Tx40 Girder)

BENT REPORT

BENT NO. 5 (S 89 45 52.68 E)
DISTANCE BETWEEN STATION LINE AND BEAM 1, 98.457 L

		BEAM SPAC. (C.L. BENT)	BEAM ANGLE D M S
SPAN 5	BEAM 1	0.000	42 52 59
	BEAM 2	12.491	42 52 59
	BEAM 3	12.491	42 52 59
	BEAM 4	12.491	42 52 59
	BEAM 5	12.491	42 52 59
	TOTAL	49.963	

BENT NO. 6 (S 89 45 52.68 E)
DISTANCE BETWEEN STATION LINE AND BEAM 1, 98.457 L

		BEAM SPAC. (C.L. BENT)	BEAM ANGLE D M S
SPAN 5	BEAM 1	0.000	42 52 59
	BEAM 2	12.491	42 52 59
	BEAM 3	12.491	42 52 59
	BEAM 4	12.491	42 52 59
	BEAM 5	12.491	42 52 59
	TOTAL	49.963	

BEAM REPORT

BEAM REPORT, SPAN 5

	HORIZONTAL DISTANCE C-C BENT	C-C BRG.	TRUE DISTANCE② BOT. BM. FLG.	BEAM SLOPE
BEAM 1	80.000	77.530	79.38	-0.0060
BEAM 2	80.000	77.530	79.38	-0.0057
BEAM 3	80.000	77.530	79.38	-0.0055
BEAM 4	80.000	77.530	79.38	-0.0052
BEAM 5	80.000	77.530	79.38	-0.0049

①See IGEB Standard for orientation of dimension.

②Girder lengths shown are bottom flange lengths with adjustments made for beam slope.

HL93 LOADING

SH 550

GIRDER LAYOUT SPANS #4-5

NB MAINLANE
UPRR #2 OVERPASS

STATE OF TEXAS
JORGE A. MADRIGAL
97243
LICENSED
PROFESSIONAL ENGINEER
06/11/2024

RMA
CAMERON COUNTY REGIONAL MOBILITY AUTHORITY

L&G Engineering
Highway / Civil
Structural / Bridge
Environmental
Firm No.: F-4105
2100 W. Expressway 83
Harlingen, TX. 78550
Phone: (956) 595-0813
Fax: (956) 595-8018
903 S. Stewart Rd., Ste. 10
Mission, TX. 78572
Phone: (956) 585-1909
Fax: (956) 585-1927

DRAWING PREPARED BY: L&G ENGINEERING

SHEET 1 OF 1			
FED. RD. DIV. NO.	FEDERAL AID PROJECT NO.		SHEET NO.
6			
DGN:	STATE	DIST.	COUNTY
CHK DGN:	TEXAS	PHARR	CAMERON
DWG:	CONT.	SECT.	JOB	HIGHWAY NO.
CHK DWG:	0684	01	068	SH550

K:\CCRMA\SH 550\BRIDGES\Girder Layouts\GirderLayout*SH550*UPRR(NB).dgn

6/11/2024

Docusign Envelope ID: D24B0E46-A040-4DCF-9159-2076E4A3664D

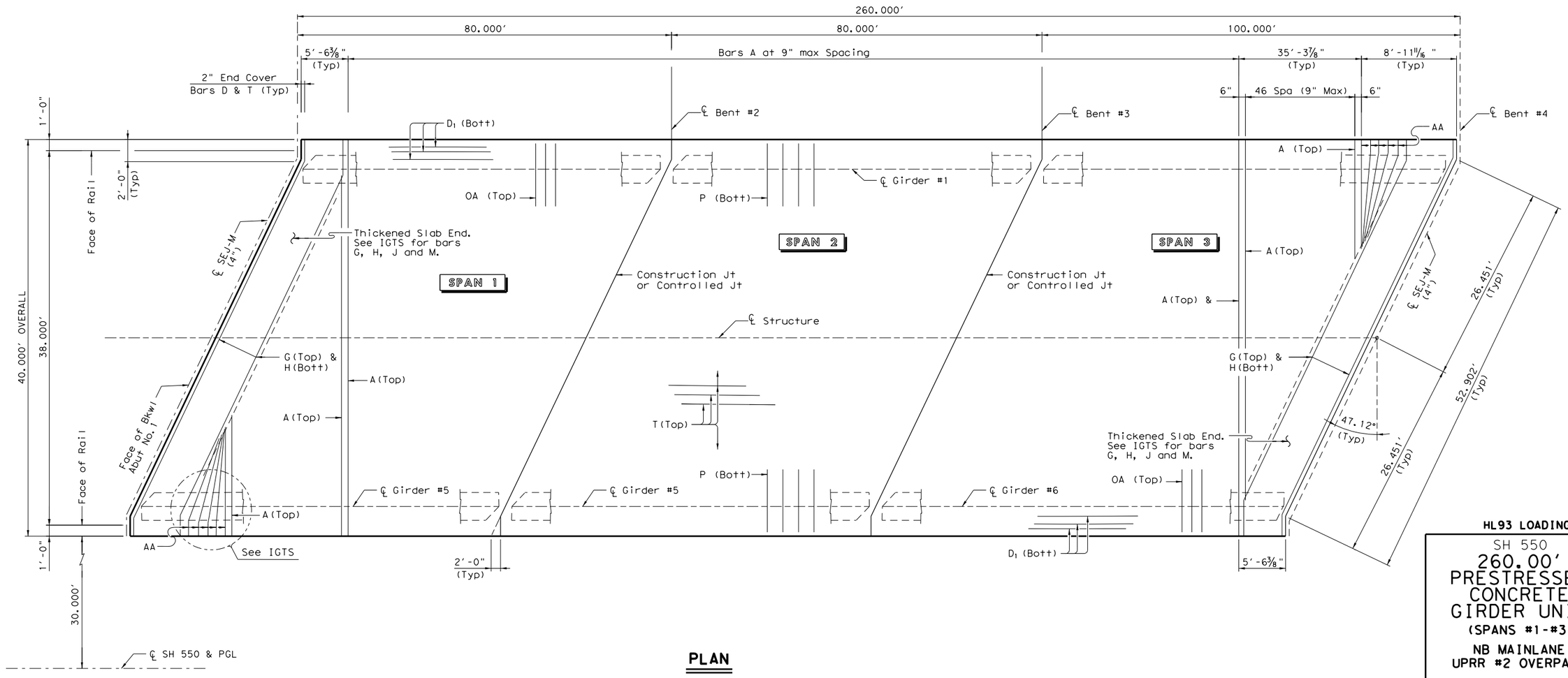

PLAN

HL93 LOADING

SH 550
260.00'
PRESTRESSED CONCRETE GIRDER UNIT
(SPANS #1-#3)

NB MAINLANE
UPRR #2 OVERPASS

RMA
CAMERON COUNTY REGIONAL MOBILITY AUTHORITY

L&G Engineering
Highway / Civil
Structural / Bridge
Environmental
Firm No. : F-4105
2100 W. Expressway 83
Weslaco, TX. 78596
Phone : (956) 565-6013
Fax : (956) 565-6018
940 S. Stewart Rd., Ste. 10
Mission, TX. 78572
Phone : (956) 585-1909
Fax : (956) 585-1927

STATE OF TEXAS
JORGE A. MADRIGAL
97243
LICENSED PROFESSIONAL ENGINEER
06/11/2024

DRAWING PREPARED BY: L&G ENGINEERING				
SHEET 1 OF 2				
FED. RD. DIV. NO.	FEDERAL AID PROJECT NO.			SHEET NO.
6				
DGN:	STATE	DIST.	COUNTY	
CHK DGN:	TEXAS	PHARR	CAMERON	
DWG:	CONT.	SECT.	JOB	HIGHWAY NO.
CHK DWG:	0684	01	068	SH550

6/11/2024 K:\CCRMA\SH 550\BRIDGES\Span Layouts\UPRR(NB)\Span Units*SH 550@UPRR (NB)*Span1-3.dgn

Docusign Envelope ID: D24B0E46-A040-4DCF-9159-2076E4A3664D

Span No.	Girder No.	"A" Ft	"B" Ft
1	All	0.064	0.091
2	All	0.065	0.093
3	All	0.130	0.185

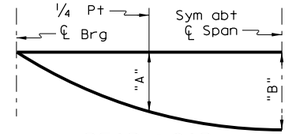

DEAD LOAD DEFLECTION DIAGRAM

Calculated deflections shown are due to the concrete slab on interior girders only (Ec = 5000 ksi). Adjust values as required for exterior girders and if optional slab forming is used. These values may require field verification.

TABLE OF SECTION DEPTHS

Span No.	Girder No.	"X" at ℄ Brg	"Y" at ℄ Brg	"Z" at ℄ Span
1	All	11"	4'-3"	9⅝"
2	All	11"	4'-3"	9⅝"
3	All	11¼"	4'-3¼"	9⅝"

BAR TABLE

BAR	SIZE
A	#4
AA	#5
D	#4
G	#4
H	#4
J	#4
K	#4
M	#4
OA	#5
P	#4
T	#4

TABLE OF ESTIMATED QUANTITIES

SPAN	REINF CONC SLAB	PRESTRESSED CONC GIRDER (Type Tx40)	REINFORCING STEEL
NO.	SF	③ LF	Lb ②
1	3200	396.90	7360
2	3200	397.50	7360
3	4000	597.00	9200
TOTAL	10400	1391.40	23920

② Reinforcing steel weight is calculated using an approximate factor of 2.3 Lbs per Sq Ft.

③ Lengths shown are bottom flange lengths with adjustments made for girder slope.
SPAN 1 ~ 79.38 LF each girder
SPAN 2 ~ 79.50 LF each girder
SPAN 3 ~ 99.50 LF each girder

GENERAL NOTES:

Designed according to AASHTO LRFD Bridge Design Specifications.
See IGTS standard for Thickened slab End details and quantity adjustments.
See PCP and PCP-FAB for panel details not shown.
See IGMS standard for miscellaneous details.
See appicable rail details for rail anchorage in slab.
See PMDF standard for details and quantity adjustments if this option is used.

Cover dimensions are clear dimensions, unless noted otherwise.

MATERIAL NOTES:

Provide Class S concrete (f'c=4,000 psi).
Provide Grade 60 reinforing steel.
Provide bar laps, where required, as follow:
Uncoated ~ #4 = 1'-7"
Deformed welded Wire Reinforcement (WWR) (ASTM A1064) of equal size and spacing may be substituted for Bars A, AA, D, OA, P or T unless noted otherwise.

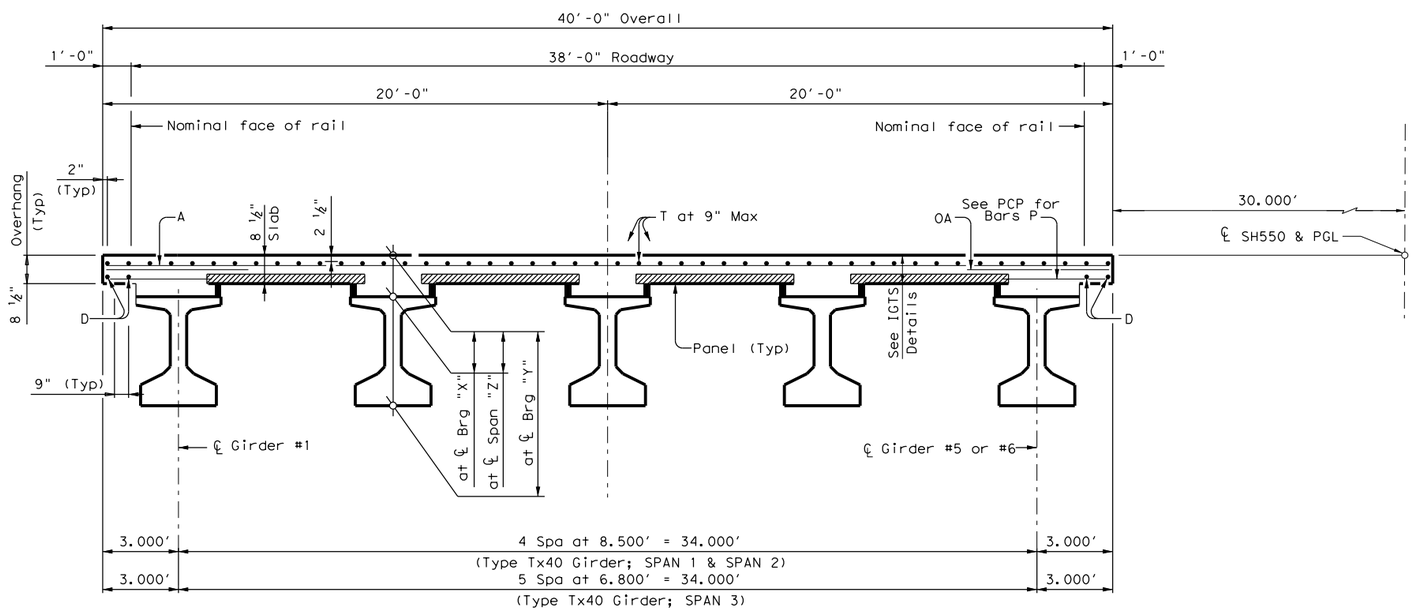

TYPICAL TRANSVERSE SECTION

HL93 LOADING

SH 550
260.00'
PRESTRESSED CONCRETE GIRDER UNIT
(SPANS #1-#3)

NB MAINLANE
UPRR #2 OVERPASS

RMA
CAMERON COUNTY REGIONAL MOBILITY AUTHORITY

L&G Engineering
Highway / Civil
Structural / Bridge
Environmental
Firm No.: F-4105
2100 W. Expressway 83
Mercedes, TX. 78570
Phone : (956) 565-0813
Fax : (956) 565-4018
903 S. Stewart Rd., Ste. 10
Mission, TX. 78572
Phone : (956) 585-1909
Fax : (956) 585-1927

STATE OF TEXAS
JORGE A. MADRIGAL
97243
LICENSED PROFESSIONAL ENGINEER
06/11/2024

DRAWING PREPARED BY: L&G ENGINEERING

SHEET 2 OF 2

FED. RD. DIV. NO.	FEDERAL AID PROJECT NO.		SHEET NO.
6			

DGN:	STATE	DIST.	COUNTY
CHK DGN:	TEXAS	PHARR	CAMERON

DWG:	CONT.	SECT.	JOB	HIGHWAY NO.
CHK DWG:	0684	01	068	SH550

6/11/2024 K:\CCRMA\SH 550\BRIDGES\Span Layouts\UPRR(NB)\Span Units*Trans Sec*SH550*UPRR(NB)1-3.dgn

Docusign Envelope ID: D24B0E46-A040-4DCF-9159-2076E4A3664D

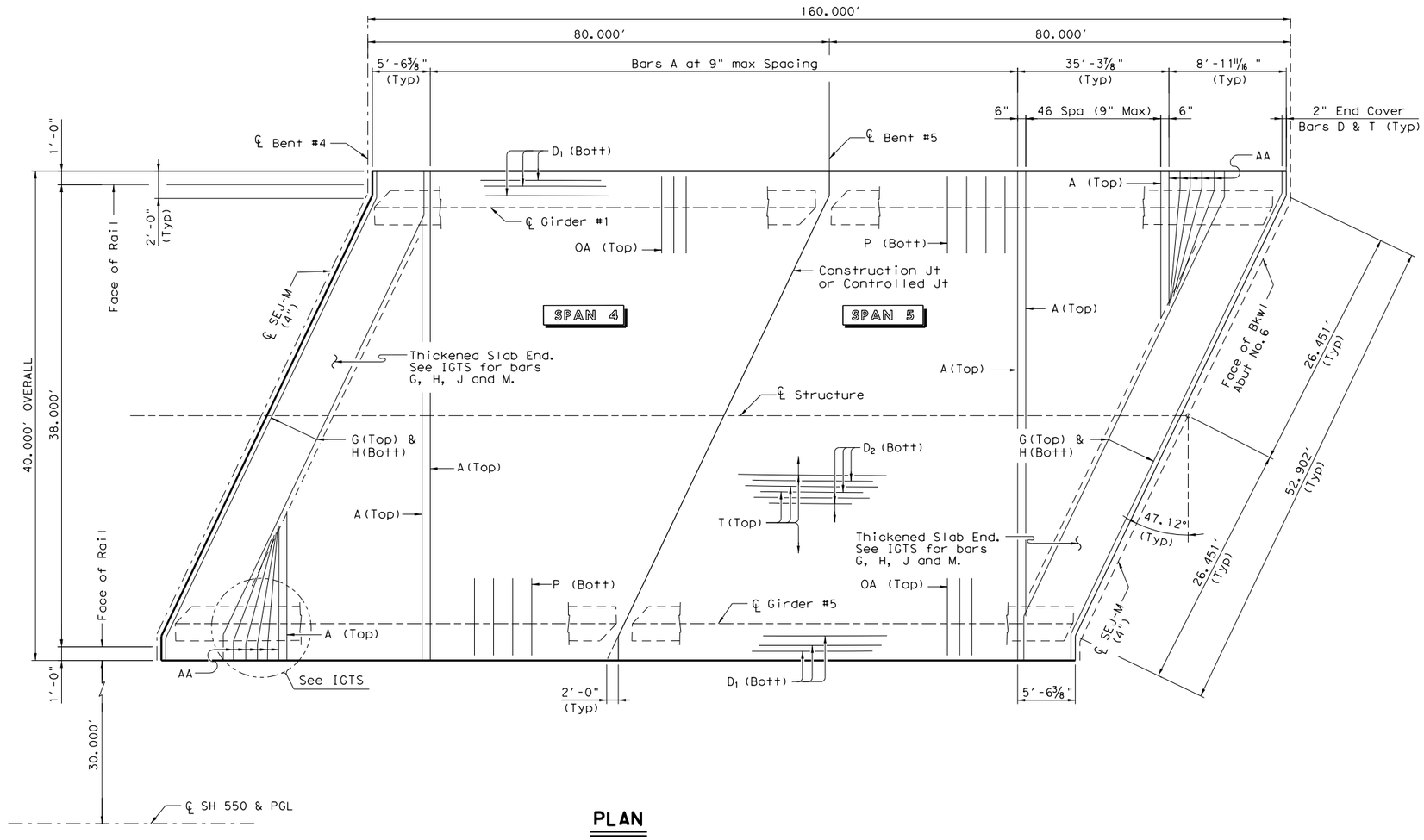

PLAN

HL93 LOADING

SH 550
160.00'
PRESTRESSED
CONCRETE
GIRDER UNIT
(SPANS #4 &#5)

NB MAINLANE
UPRR #2 OVERPASS

RMA
CAMERON COUNTY REGIONAL MOBILITY AUTHORITY

L & G Engineering
Highway / Civil
Structural / Bridge
Environmental
Firm No. : F-4105
2100 W. Expressway 83
Mercedes, TX. 78570
Phone : (956) 565-3813
Fax : (956) 565-3618
900 S. Stewart Rd. Ste. 10
Mission, TX. 78572
Phone : (956) 585-1999
Fax : (956) 585-1927

STATE OF TEXAS
JORGE A. MADRIGAL
97243
LICENSED
PROFESSIONAL ENGINEER
06/11/2024

DRAWING PREPARED BY: L&G ENGINEERING

SHEET 1 OF 2

FED. RD. DIV. NO.	FEDERAL AID PROJECT NO.		SHEET NO.
6			

DGN:	STATE	DIST.	COUNTY	
CHK DGN:	TEXAS	PHARR	CAMERON	
DWG:	CONT.	SECT.	JOB	HIGHWAY NO.
CHK DWG:	0684	01	068	SH550

6/11/2024 K:\CCRMA\SH 550\BRIDGES\Span Layouts\UPRR(NB)\Span Units*SH 550@UPRR (NB)*Span4&5.dgn

Docusign Envelope ID: D24B0E46-A040-4DCF-9159-2076E4A3664D

Span No.	Girder No.	"A" Ft	"B" Ft
4	All	0.065	0.093
5	All	0.064	0.091

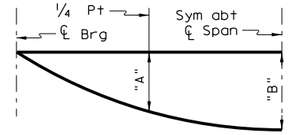

DEAD LOAD DEFLECTION DIAGRAM

Calculated deflections shown are due to the concrete slab on interior girders only (Ec = 5000 ksi). Adjust values as required for exterior girders and if optional slab forming is used. These values may require field verification.

TABLE OF SECTION DEPTHS

Span No.	Girder No.	"X" at ℄ Brg	"Y" at ℄ Brg	"Z" at ℄ Span
4	All	11"	4'-3"	9⅝"
5	All	11"	4'-3"	9⅝"

BAR TABLE

BAR	SIZE
A	#4
AA	#5
D	#4
G	#4
H	#4
J	#4
K	#4
M	#4
OA	#5
P	#4
T	#4

TABLE OF ESTIMATED QUANTITIES

SPAN	REINF CONC SLAB	PRESTRESSED CONC GIRDER (Type Tx40)	REINFORCING STEEL
NO.	SF	③ LF	Lb ②
4	3200	397.50	7360
5	3200	396.90	7360
TOTAL	6400	794.40	14720

② Reinforcing steel weight is calculated using an approximate factor of 2.3 Lbs per Sq Ft.

③ Lengths shown are bottom flange lengths with adjustments made for girder slope.
SPAN 4 ~ 79.50 LF each girder
SPAN 5 ~ 79.38 LF each girder

GENERAL NOTES:

Designed according to AASHTO LRFD Bridge Design Specifications.
See IGTS standard for Thickened slab End details and quantity adjustments.
See PCP and PCP-FAB for panel details not shown.
See PCP(O) and PCP(O)-FAB for precast overhang panel details if this option is used.
See IGMS standard for miscellaneous details.
See appicable rail details for rail anchorage in slab.
See PMDF standard for details and quantity adjustments if this option is used.

Cover dimensions are clear dimensions, unless noted otherwise.

MATERIAL NOTES:

Provide Class S concrete (f'c=4,000 psi).
Provide Grade 60 reinforing steel.
Provide bar laps, where required, as follow:
Uncoated ~ #4 = 1'-7"
Deformed welded Wire Reinforcement (WWR) (ASTM A1064) of equal size and spacing may be substituted for Bars A, AA, D, OA, P or T unless noted otherwise.

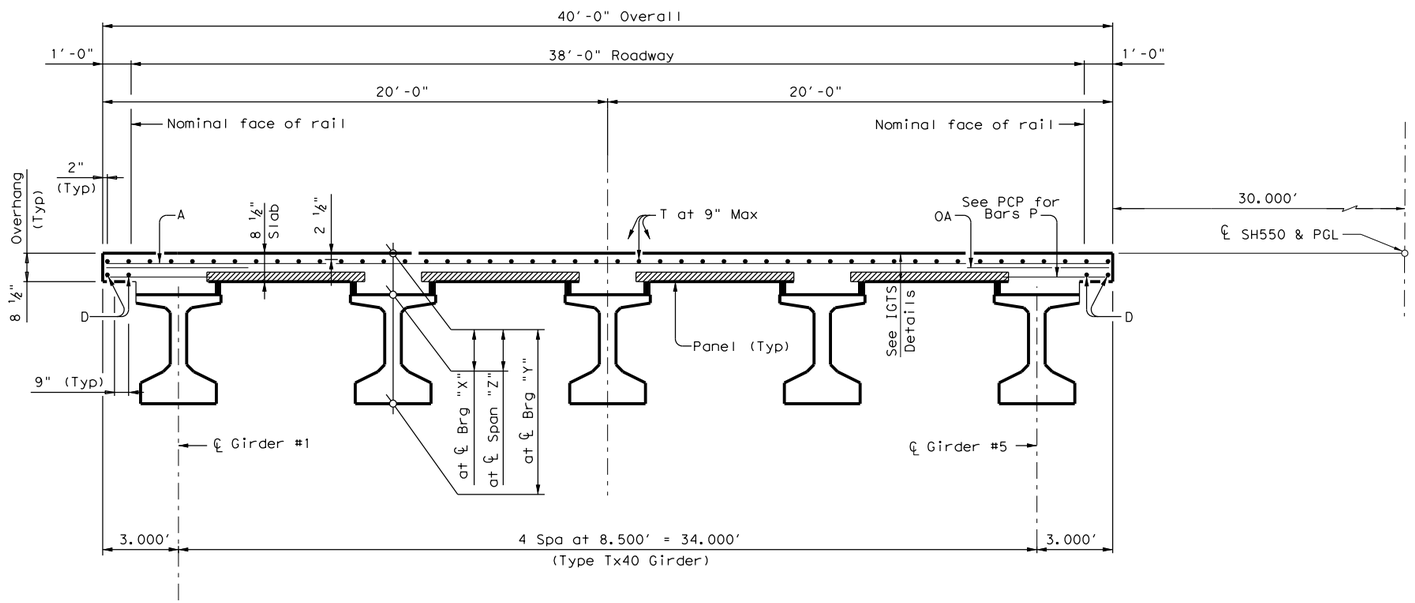

TYPICAL TRANSVERSE SECTION

HL93 LOADING

SH 550
160.00'
PRESTRESSED CONCRETE GIRDER UNIT
(SPANS #4 & #5)

NB MAINLANE
UPRR #2 OVERPASS

RMA
CAMERON COUNTY REGIONAL MOBILITY AUTHORITY

L&G Engineering
Highway / Civil
Structural / Bridge
Environmental
Firm No.: F-4105
2100 W. Expressway 83
Mercedes, TX. 78570
Phone: (956) 565-0613
Fax: (956) 565-4018
903 S. Stewart Rd., Ste. 10
Mission, TX. 78572
Phone: (956) 585-1909
Fax: (956) 585-1927

STATE OF TEXAS
JORGE A. MADRIGAL
97243
LICENSED PROFESSIONAL ENGINEER
06/11/2024

DRAWING PREPARED BY: L&G ENGINEERING

SHEET 2 OF 2

FED. RD. DIV. NO.	FEDERAL AID PROJECT NO.		SHEET NO.
6			

DGN:	STATE	DIST.	COUNTY	
CHK DGN:	TEXAS	PHARR	CAMERON	
DWG:	CONT.	SECT.	JOB	HIGHWAY NO.
CHK DWG:	0684	01	068	SH550

6/11/2024 K:\CCRMA\SH 550\BRIDGES\Span Layouts\UPRR(NB)\Span Units*Trans Sec*SH550*UPRR(NB)4&5.dgn

Docusign Envelope ID: D24B0E46-A040-4DCF-9159-2076E4A3664D

ALL BENT LINE BEARINGS ARE N 89° 45' 52.68" W

NOTE: ! CAUTION ! CONTRACTOR'S ATTENTION IS CALLED TO THE FACT THAT THE EXISTING HIGH VOLTAGE TRANSMISSION LINE WILL BE IN CONFLICT WITH PILE DRIVING OPERATIONS, BEAM AND PRESTRESSED CONCRETE PLANEL ERECTION. THE CONTRACTOR WILL CONTACT AND COORDINATE WITH MR. LANCE ORDNER (AEP) AT 361-881-5693 PRIOR TO WORKING IN THIS AREA. CONTRACTOR SHALL EXERCISE CAUTION AND ANY DAMAGE SHALL BE REPAIRED BY THE CONTRACTOR AT HIS OWN EXPENSE.

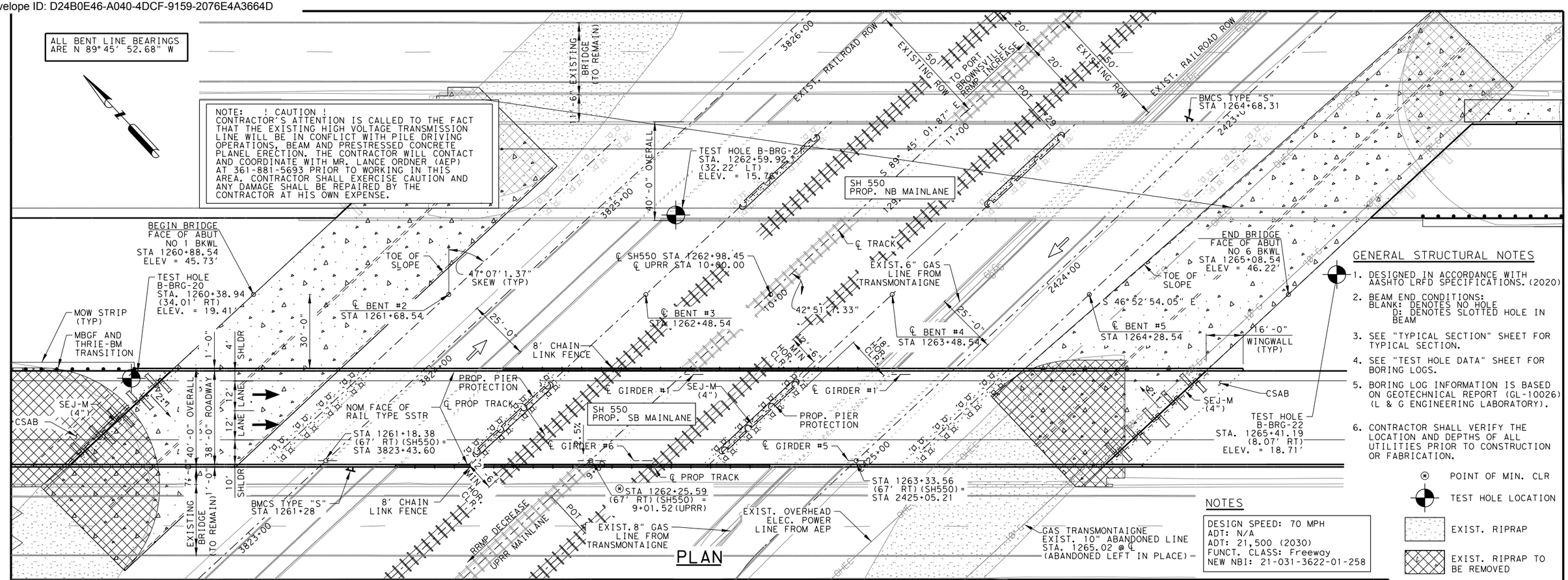

GENERAL STRUCTURAL NOTES

1. DESIGNED IN ACCORDANCE WITH AASHTO LRFD SPECIFICATIONS. (2020)
2. BEAM END CONDITIONS:
   BLANK: DENOTES NO HOLE
   D: DENOTES SLOTTED HOLE IN BEAM
3. SEE "TYPICAL SECTION" SHEET FOR TYPICAL SECTION.
4. SEE "TEST HOLE DATA" SHEET FOR BORING LOGS.
5. BORING LOG INFORMATION IS BASED ON GEOTECHNICAL REPORT (GL-10026) (L & G ENGINEERING LABORATORY).
6. CONTRACTOR SHALL VERIFY THE LOCATION AND DEPTHS OF ALL UTILITIES PRIOR TO CONSTRUCTION OR FABRICATION.

POINT OF MIN. CLR

TEST HOLE LOCATION

EXIST. RIPRAP

EXIST. RIPRAP TO BE REMOVED

PROP. RIPRAP

NOTES

DESIGN SPEED: 70 MPH
ADT: N/A
ADT: 21,500 (2030)
FUNCT. CLASS: Freeway
NEW NBI: 21-031-3622-01-258

HL93 LOADING

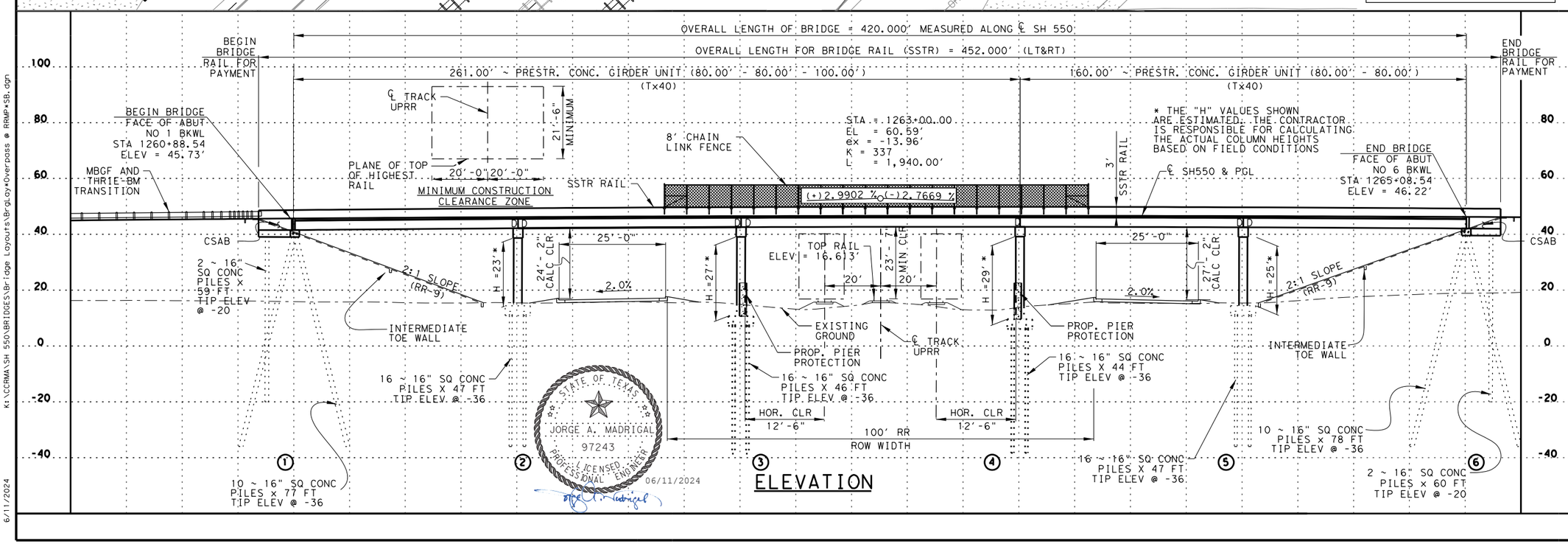

STATE OF TEXAS
JORGE A. MADRIGAL
97243
LICENSED PROFESSIONAL ENGINEER
06/11/2024

SH 550

BRIDGE LAYOUT

SB MAINLANE
UPRR #2 OVERPASS
SUPERSTRUCTURE INV/OPR RATINGS: 1.42/1.84

SCALE: PLAN 1":40'
PROFILE 1":40'

RMA
CAMERON COUNTY REGIONAL MOBILITY AUTHORITY

L&G Engineering
Highway / Civil
Structural / Bridge
Environmental
Firm No.: F-4105
2100 W. Expressway 83
Mercedes, TX. 78570
Phone: (956) 565-4813
Fax: (956) 565-4018
300 S. Stewart Rd, Ste. 10
Weslaco, TX. 78596
Phone: (956) 555-7999
Fax: (956) 565-1927

DRAWING PREPARED BY: L&G ENGINEERING

SHEET 2 OF 10

FED. RD. DIV. NO.	FEDERAL AID PROJECT NO.		SHEET NO.
6	STP 2020(678)MM		
DGN:	STATE	DIST.	COUNTY
CHK DGN:	TEXAS	PHARR	CAMERON
DWG:	CONT.	SECT.	JOB	HIGHWAY NO.
CHK DWG:	0684	01	068	SH550

K:\CCRMA\SH 550\BRIDGES\Bridge Layouts\Bridge Layout\Overpass @ RRMP+5B.dgn

6/11/2024

Docusign Envelope ID: D24B0E46-A040-4DCF-9159-2076E4A3664D

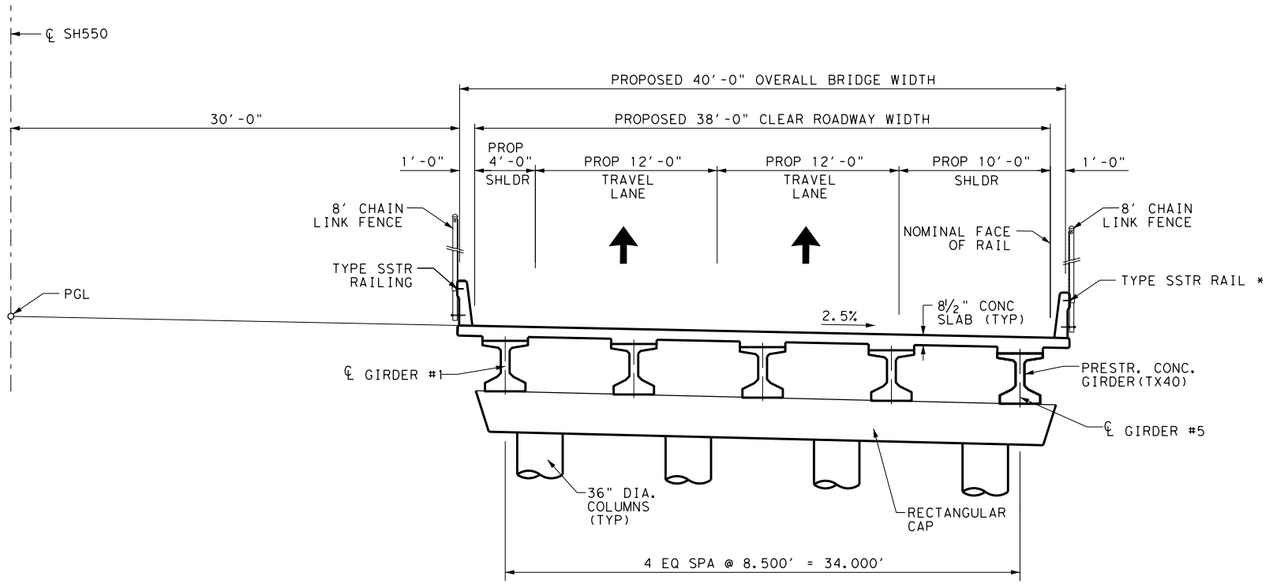

TYPICAL SECTION

N.T.S.

* NOTE: No Side Slot Drains On Bridge Rail.

HL93 LOADING

SH 550

TYPICAL SECTION

SB MAINLANE
UPRR#2 OVERPASS

RMA
CAMERON COUNTY REGIONAL MOBILITY AUTHORITY

L&G Engineering
Highway / Civil
Structural / Bridge
Environmental
Firm No. : F-4105
2100 W. Expressway 83
Weslaco, TX. 78596
Phone : (956) 565-0813
Fax : (956) 565-8016
900 S. Stewart Rd., Ste. 10
Mission, TX. 78572
Phone : (956) 585-1909
Fax : (956) 585-1927

STATE OF TEXAS
JORGE A. MADRIGAL
97243
LICENSED PROFESSIONAL ENGINEER
06/11/2024

DRAWING PREPARED BY: L&G ENGINEERING

SHEET 1 OF 1

FED. RD. DIV. NO.	FEDERAL AID PROJECT NO.		SHEET NO.
6			

DGN:	STATE	DIST.	COUNTY	
CHK DGN:	TEXAS	PHARR	CAMERON	
DWG:	CONT.	SECT.	JOB	HIGHWAY NO.
CHK DWG:	0684	01	068	SH550

6/11/2024 K:\CCRMA\SH 550\BRIDGES\Bridge Typical Sections\TypSec*FM 550*UPRR(SB).dgn

Docusign Envelope ID: D24B0E46-A040-4DCF-9159-2076E4A3664D

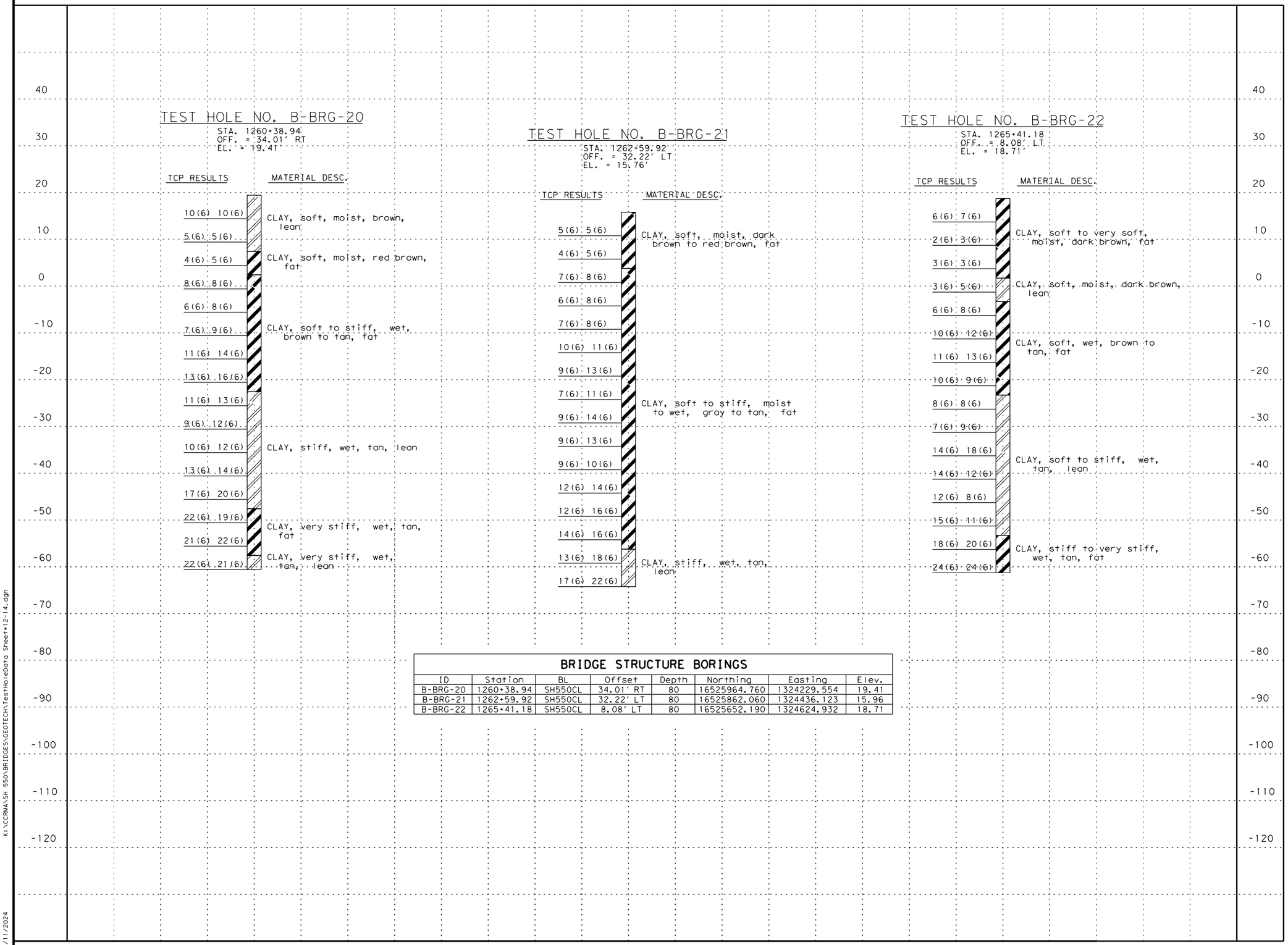

BRIDGE STRUCTURE BORINGS

ID	Station	BL	Offset	Depth	Northing	Easting	Elev.
B-BRG-20	1260+38.94	SH550CL	34.01' RT	80	16525964.760	1324229.554	19.41
B-BRG-21	1262+59.92	SH550CL	32.22' LT	80	16525862.060	1324436.123	15.96
B-BRG-22	1265+41.18	SH550CL	8.08' LT	80	16525652.190	1324624.932	18.71

GENERAL NOTES

1. TEST HOLE DATA PROVIDED BY L&G ENGINEERING LABORATORY
2. TEST HOLE STATION, OFFSET AND ELEVATION ARE APPROXIMATE BASED ON FIELD MEASUREMENT

STATE OF TEXAS
JORGE A. MADRIGAL
97243
LICENSED PROFESSIONAL ENGINEER
06/11/2024

SH 550

TEST HOLE DATA SHEET

SB MAINLANE
UPRR #2 OVERPASS

RMA
CAMERON COUNTY REGIONAL MOBILITY AUTHORITY

L&G Engineering
Highway / Civil
Structural / Bridge
Environmental
Firm No. : F-4105

2190 W. Expressway 83
Mercedes, TX. 78570
Phone : (956) 565-4613
Fax : (956) 565-9016

955 S. Stewart Rd., Ste. 10
Mission, TX. 78572
Phone : (956) 585-1900
Fax : (956) 585-1927

DRAWING PREPARED BY: L&G ENG LAB

SHEET 1 OF 1

FED. RD. DIV. NO.	FEDERAL AID PROJECT NO.	SHEET NO.
6		

DGN:	STATE	DIST.	COUNTY	
CHK DGN:	TEXAS	PHARR	CAMERON	
DWG:	CONT.	SECT.	JOB	HIGHWAY NO.
CHK DWG:	0684	01	068	SH 550

K:\CCRMA\SH 550\BRIDGES\GEOTECH\TestHoleData Sheet+12-14.dgn

6/11/2024

Docusign Envelope ID: D24B0E46-A040-4DCF-9159-2076E4A3664D

SUMMARY OF ESTIMATED QUANTITIES

ITEM NO.	400	409	420	420	420	422	425	432	450	454	644	
DESC. CODE	6005	6001	6013	6025	6049	6001	6037	6001	6023	6018	6065	
BID ITEM DESCRIPTION	CEMENT STABILIZED BACKFILL	PRESTR CONC PILE (16 IN SQ) (SULF)	CLASS "C" CONCRETE			REINFORCED CONCRETE SLAB	PRESTRESSED CONCRETE GIRDER	RIP RAP (CONC)	RAILING	SEALED EXPANSION JOINT	BRIDGE MNT CLEARANCE SIGN	
BRIDGE ELEMENT			ABUT	BENT	CRASH WALL	CLASS "S"	Tx40	(4 IN)	TY SSTR	(4") (SEJ-M)	(TY S)	
	CY	LF	CY	CY	CY	SF	LF	CY	LF	LF	EA	
2 ~ ABUTMENTS	236	1788	76.8						64	166.5		
4 ~ INTERIOR BENTS		2944		310.9	101.0							
1 ~ 260.00' PRESTR CONC GIRDER UNIT						10,400	1,391.40		504			
1 ~ 160.00' PRESTR CONC GIRDER UNIT						6,700	794.40		336			
TOTAL	236	4732	76.8	310.9	101.0	16,800	2,185.80	250	904	166.5	1	

BEARING SEAT ELEVATIONS

		BEAM 1	BEAM 2	BEAM 3	BEAM 4	BEAM 5	BEAM 6
BENT 1	(FWD)	40.158	39.867	39.574	39.279	38.981	
BENT 2	(BK)	40.720	40.450	40.178	39.904	39.627	
	(FWD)	40.732	40.463	40.192	39.918	39.641	
BENT 3	(BK)	41.113	40.865	40.615	40.362	40.107	
	(FWD)	41.100	40.902	40.703	40.502	40.299	40.095
BENT 4	(BK)	41.316	41.140	40.962	40.782	40.601	40.419
	(FWD)	41.338	41.118	40.896	40.671	40.443	
BENT 5	(BK)	41.303	41.104	40.902	40.698	40.492	
	(FWD)	41.299	41.101	40.900	40.697	40.491	
BENT 6	(BK)	41.080	40.903	40.723	40.541	40.356	

STATE OF TEXAS
JORGE A. MADRIGAL
97243
LICENSED PROFESSIONAL ENGINEER
06/11/2024

SH 550

ESTIMATED QUANTITIES & BEARING SEAT ELEVATIONS

SB MAINLANE UPPR #2 OVERPASS

RMA
CAMERON COUNTY REGIONAL MOBILITY AUTHORITY

L&G Engineering
Highway / Civil
Structural / Bridge
Environmental
Firm No. : F-4105
2100 W. Expressway 83
Harlingen, TX. 78550
Phone : (956) 595-0813
Fax : (956) 595-8018
903 S. Stewart Rd., Ste. 10
Mission, TX. 78572
Phone : (956) 585-1909
Fax : (956) 585-1927

DRAWING PREPARED BY: L&G ENGINEERING

SHEET 1 OF 1

FED. RD. DIV. NO.	FEDERAL AID PROJECT NO.		SHEET NO.
6			

DGN:	STATE	DIST.	COUNTY	
CHK DGN:	TEXAS	PHARR	CAMERON	
DWG:	CONT.	SECT.	JOB	HIGHWAY NO.
CHK DWG:	0684	01	068	SH550

K:\CCRMA\SH 550\BRIDGES\Quantities\SH550UPRRSB*BrdgE&Q.dgn

6/11/2024

Docusign Envelope ID: D24B0E46-A040-4DCF-9159-2076E4A3664D

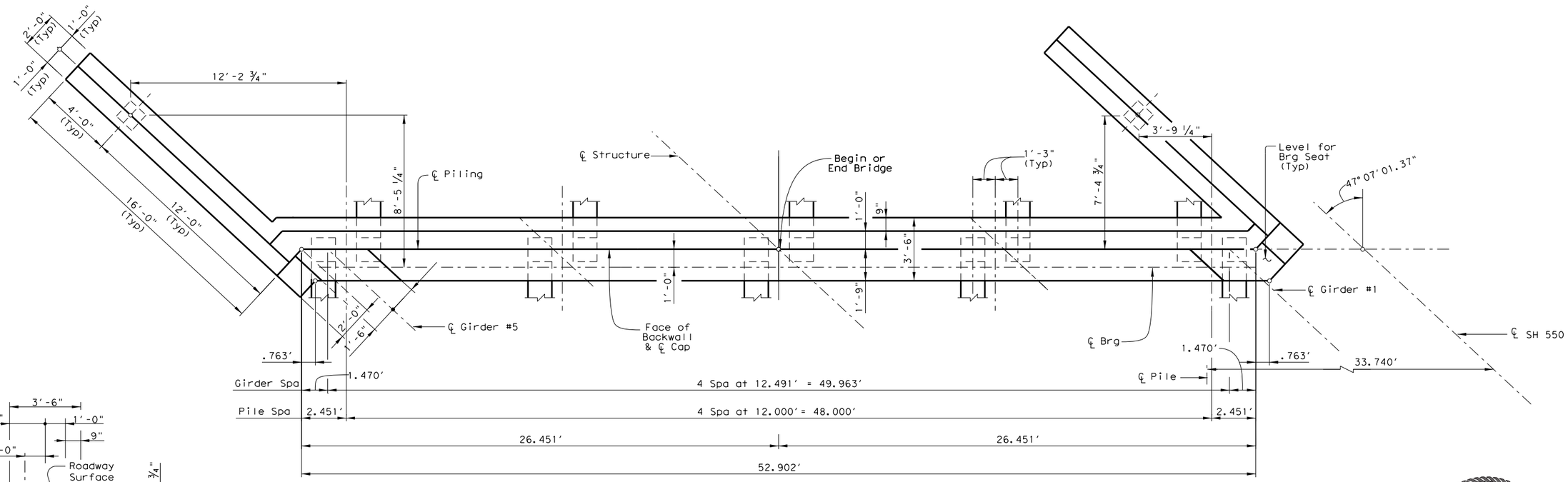

PLAN

(Showing Abut. No.1, Abut. No. 6 Opposite Hand)

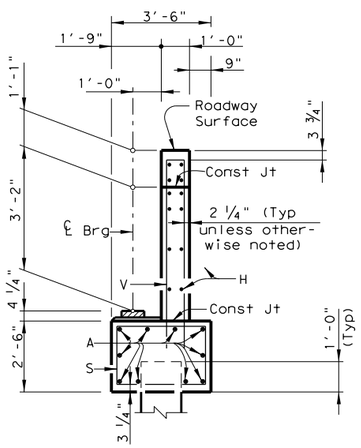

SECTION A-A

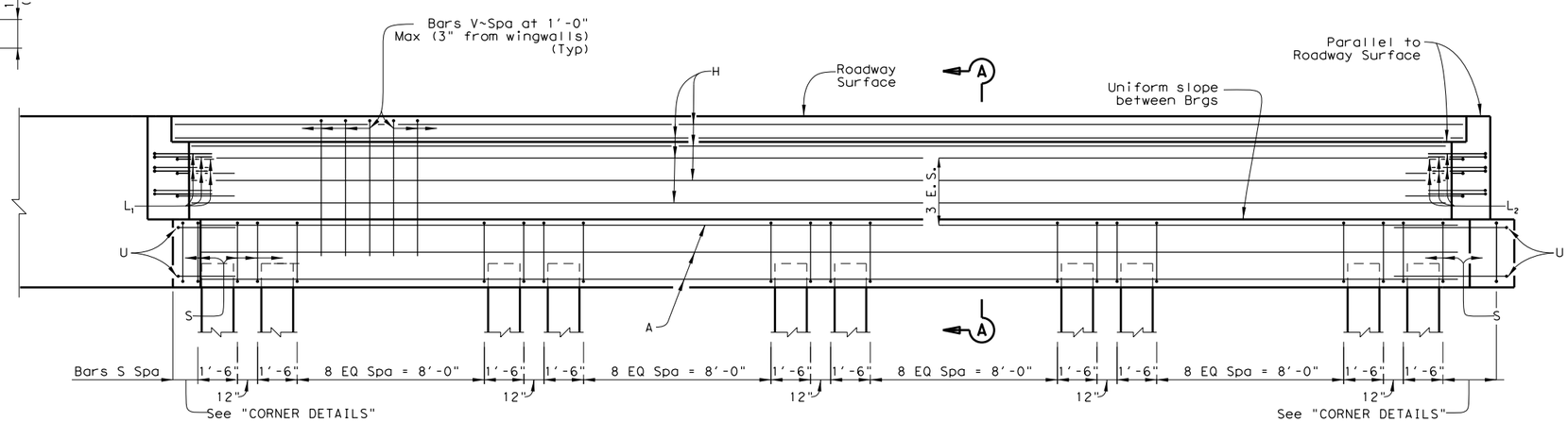

ELEVATION

STATE OF TEXAS
JORGE A. MADRIGAL
97243
LICENSED PROFESSIONAL ENGINEER
06/11/2024

HL93 LOADING

SH 550

ABUTMENTS NO. 1 & 6

SB MAINLANE
UPRR #2 OVERPASS

RMA
CAMERON COUNTY REGIONAL MOBILITY AUTHORITY

L&G Engineering
Highway / Civil
Structural / Bridge
Environmental
Firm No. : F-4105
2100 W. Expressway 83
Harlingen, TX 78550
Phone : (956) 595-0813
Fax : (956) 595-0816
900 S. Stewart Rd., Ste. 10
Mission, TX. 78572
Phone : (956) 585-1909
Fax : (956) 585-1927

DRAWING PREPARED BY: L&G ENGINEERING

SHEET 1 OF 2

FED. RD. DIV. NO.	FEDERAL AID PROJECT NO.		SHEET NO.
6			

DGN:	STATE	DIST.	COUNTY	
CHK DGN:	TEXAS	PHARR	CAMERON	
DWG:	CONT.	SECT.	JOB	HIGHWAY NO.
CHK DWG:	0684	01	068	SH550

K:\CCRMA\SH 550\BRIDGES\Abutments\UPRR\SB\Abut*OverpassSBML01 @ UPRR.dgn

6/11/2024

Docusign Envelope ID: D24B0E46-A040-4DCF-9159-2076E4A3664D

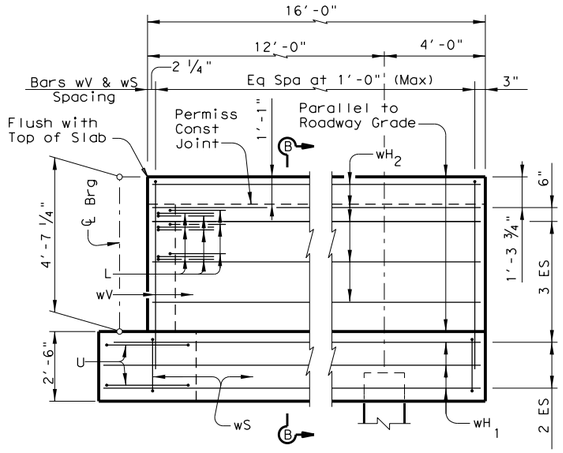

WINGWALL ELEVATION

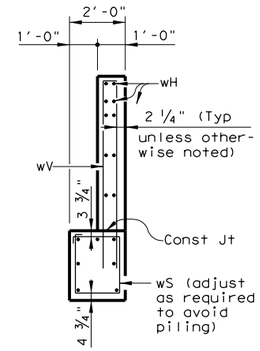

SECTION B-B

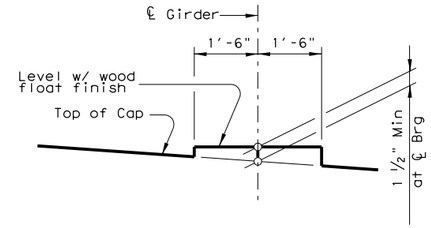

BEARING SEAT DETAIL

(Bearing surface must be clean and free of all loose material before placing bearing pad.)

① TABLE OF ESTIMATED QUANTITIES

Bar	No.	Size	Length	Weight
A	10	#11	52' -11"	2811
H	12	#6	52' -11"	954
L1	9	#6	6'-1"	82
L2	9	#6	5'-7 3/4"	76
S	50	#5	11'-4"	591
U	4	#6	11'-5 1/2"	69
V	56	#5	11' -9 1/2"	689
wH1	14	#6	17' -5"	366
wH2	20	#6	15' -8"	471
wS	34	#4	7' -8"	174
wV	34	#5	12' -0 1/2"	427
Reinforcing Steel			Lb	6710
Class "C" Concrete			CY	38.4

① Quantities shown are for one(1) Abutment only.

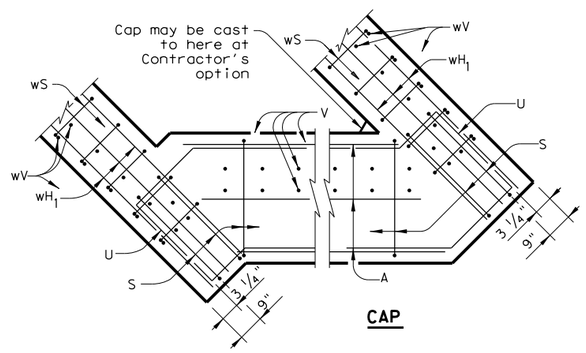

CAP

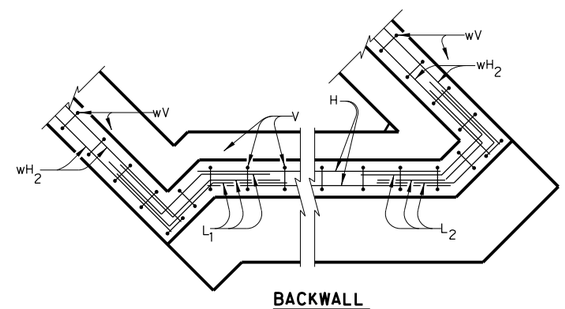

BACKWALL

CORNER DETAILS

GENERAL NOTES:

Designed according to AASHTO LRFD Bridge Design Specifications.
See Common Foundation Details (FD) standard sheet for all foundation details and notes.
See Concrete Riprap (CRR) standard sheet or Stone Riprap (SRR) standard sheet for riprap attachment details, if applicable.
See applicable rail details for rail anchorage in wingwalls.

Cover dimensions are clear dimensions, unless noted otherwise.
Reinforcing bar dimensions shown are out-to-out of bar.

MATERIAL NOTES:

Provide Class C concrete (f'c=3,600 psi).
Provide Grade 60 reinforing steel.
Galvanize dowel bars D.

Calculated Foundation Load = 56 tons/pile

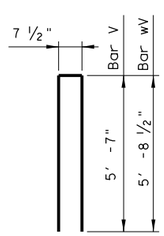

BARS V & wV

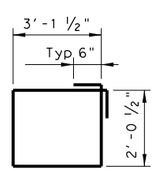

BARS S

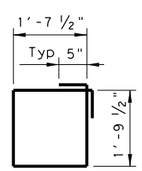

BARS wS

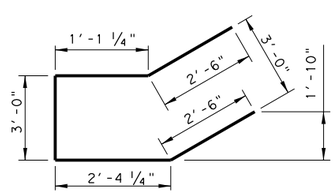

BARS U

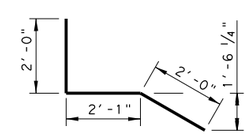

BARS L1

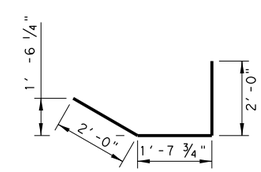

BARS L2

HL93 LOADING

SH 550

ABUTMENTS NO. 1 & 6

SB MAINLANE
UPRR #2 OVERPASS

RMA
CAMERON COUNTY REGIONAL MOBILITY AUTHORITY

L&G Engineering
Highway / Civil
Structural / Bridge
Environmental
Firm No. : F-4105
8100 W. Expressway 83
Mercedes, TX. 78570
Phone : (956) 565-4813
Fax : (956) 565-9018
905 S. Stewart Rd., Ste. 10
Mission, Tx. 78572
Phone : (956) 585-1909
Fax : (956) 585-1921

DRAWING PREPARED BY: L&G ENGINEERING

SHEET 2 OF 2

FED. RD. DIV. NO.	FEDERAL AID PROJECT NO.		SHEET NO.
6			754

DGN:	STATE	DIST.	COUNTY
CHK DGN:	TEXAS	PHARR	CAMERON

DWG:	CONT.	SECT.	JOB	HIGHWAY NO.
CHK DWG:	0684	01	068	SH550

STATE OF TEXAS
JORGE A. MADRIGAL
97243
LICENSED PROFESSIONAL ENGINEER
06/11/2024

K:\CCRMA\SH 550\BRIDGES\Abutments\UPRR+SB\Abut+OverpassSBML02 @ UPPR.dgn

6/11/2024

Docusign Envelope ID: D24B0E46-A040-4DCF-9159-2076E4A3664D

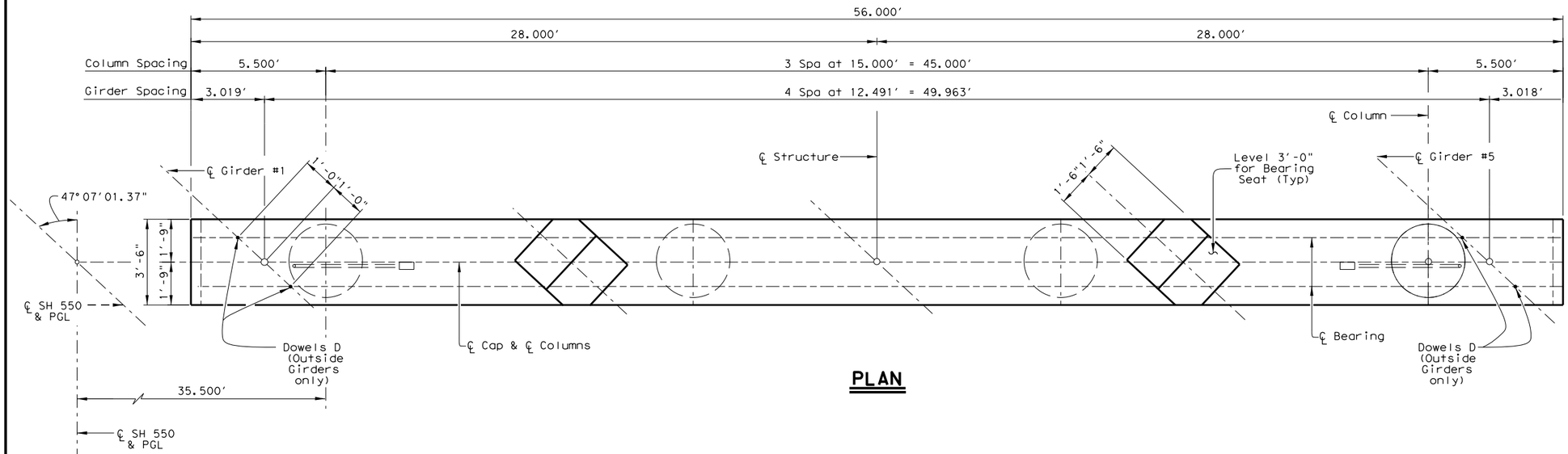

PLAN

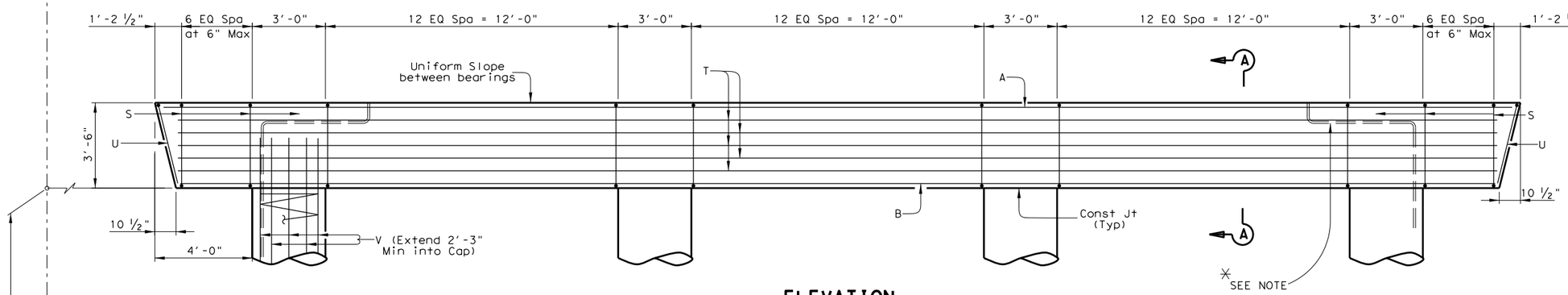

ELEVATION

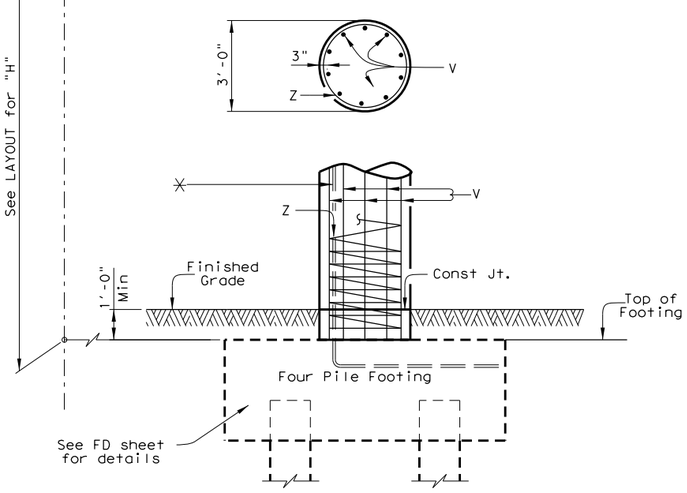

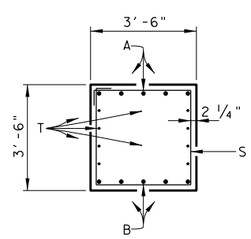

SECTION A-A

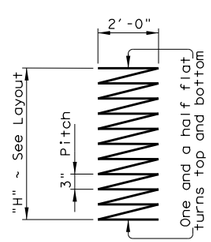

BARS Z

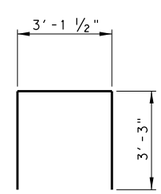

BARS U

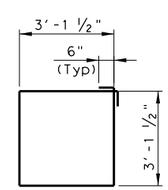

BARS S

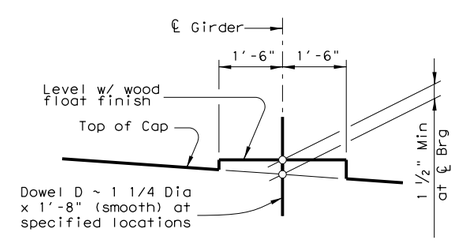

BEARING SEAT DETAIL

(Bearing surface must be clean and free of all loose material before placing bearing pad.)

✳ Maintain 1" clear distance from reinforcement. See Underpass Illumination Plan Layout Sheet for additional details.

① TABLE OF ESTIMATED QUANTITIES

Bar	No.	Size	Length	Weight
A	5	#11	55'-8"	1479
B	5	#11	53'-9"	1428
D	4	#9	1'-8"	23
S	53	#5	13'-6"	746
T	8	#5	53'-9"	448
U	2	#5	9'-7 ½"	20
V	40	#9	26'-3"	3570
Z	4	#3	777'7"	1169
Reinforcing Steel			Lb	8883
Class "C" Concrete (Cap)			CY	25.3
Class "C" Concrete (Col)②			CY	25.1
Class "C" Concrete (Ftg)			CY	25.2
Class "C" Concrete Total			CY	75.6

①Quantities shown are for Bent #2 (H=24')

②For each linear foot variation in "H" value, make the following adjustments:
Bars V length, 1'-0"
Bars Z length, 31'-5"
Reinforcing Steel, 165 Lb
Class "C" Conc. (Col), 1.047 CY

GENERAL NOTES:

Designed according to AASHTO LRFD Bridge Design Specifications.
See Bridge layout for foundation type, size and length.
See Common Foundation Details (FD) standard sheet for all foundation details and notes.

Cover dimensions are clear dimensions, unless noted otherwise.
Reinforcing bar dimensions shown are out-to-out of bar.

MATERIAL NOTES:

Provide Class C concrete (f'c=3,600 psi).
Provide Grade 60 reinforing steel.
Galvanize dowel bars D.

Calculated Foundation Load = 40 tons/pile

HL93 LOADING

STATE OF TEXAS
JORGE A. MADRIGAL
97243
LICENSED PROFESSIONAL ENGINEER
06/11/2024

SH 550

INTERIOR BENT Nos. 2 & 5

SB MAINLANE
UPRR #2 OVERPASS

RMA
CAMERON COUNTY REGIONAL MOBILITY AUTHORITY

L&G Engineering
Highway / Civil
Structural / Bridge
Environmental
Firm No.: F-4105
2100 W. Expressway 83
Mercedes, TX. 78570
Phone : (956) 565-0813
Fax : (956) 565-4018
900 S. Stewart Rd., Ste. 10
Mission, TX. 78572
Phone : (956) 585-1909
Fax : (956) 585-1927

DRAWING PREPARED BY: L&G ENGINEERING				
SHEET 1 OF 1				
FED. RD. DIV. NO.	FEDERAL AID PROJECT NO.			SHEET NO.
6				
DGN:	STATE	DIST.	COUNTY	
CHK DGN:	TEXAS	PHARR	CAMERON	
DWG:	CONT.	SECT.	JOB	HIGHWAY NO.
CHK DWG:	0684	01	068	SH550

K:\CCRMA\SH 550\BRIDGES\Bents\UPRR(SB)\SH550*BentDet*UPRR2&5*SBML*01.dgn

6/11/2024

Docusign Envelope ID: D24B0E46-A040-4DCF-9159-2076E4A3664D

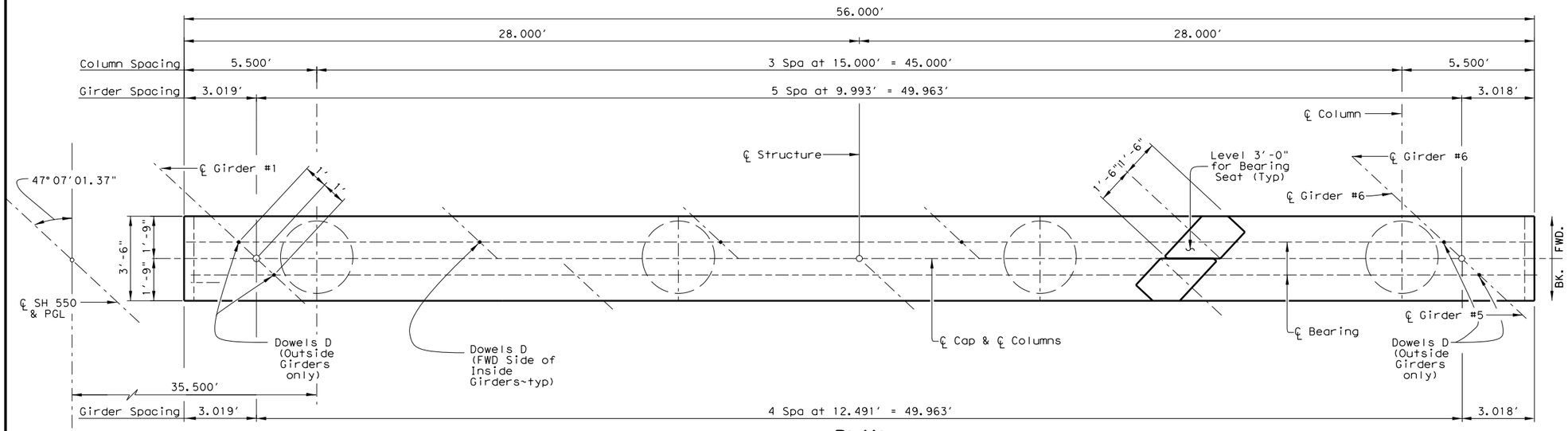

PLAN

TABLE OF ESTIMATED QUANTITIES

Bar	No.	Size	Length	Weight
A	6	#11	55'-8"	1775
B	6	#11	53'-9"	1713
D	8	#9	1'-8"	45
S	53	#5	13'-6"	746
T	8	#5	53'-9"	448
U	2	#5	9'-7 ½"	20
V	40	#9	29'-3"	3978
Z	4	#3	871'-10"	1311
Reinforcing Steel			Lb	10036
Class "C" Concrete (Cap)			CY	25.3
Class "C" Concrete (Col) ①			CY	28.3
Class "C" Concrete (Ftg)			CY	25.2
Class "C" Concrete Total			CY	78.8

① For each linear foot variation in "H" value, make the following adjustments:
Bars V length, 1'-0"
Bars Z length, 31'-5"
Reinforcing Steel, 165 Lb
Class "C" Conc. (Col), 1.047 CY

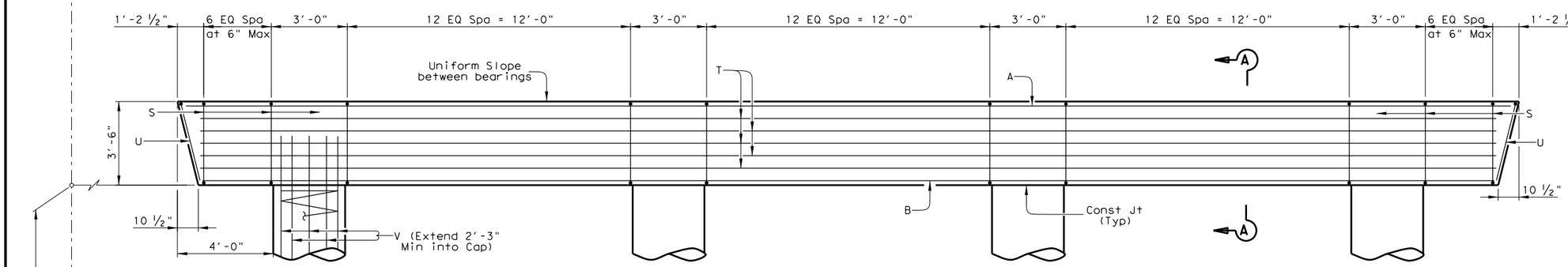

ELEVATION

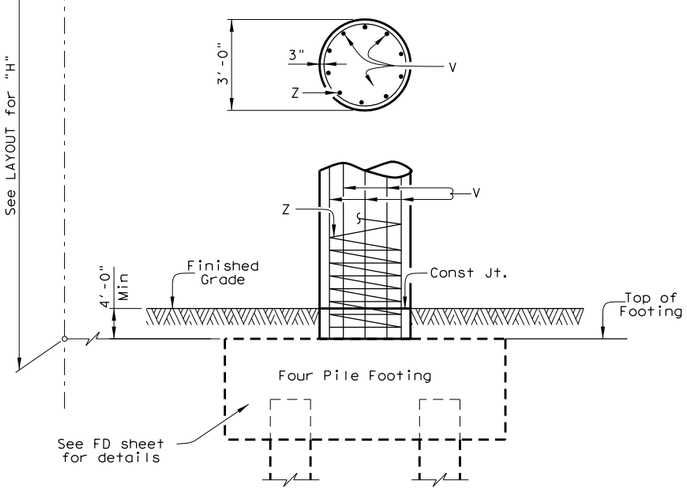

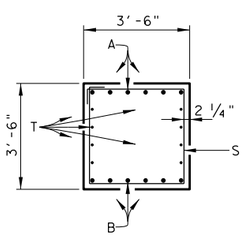

SECTION A-A

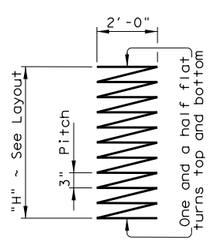

BARS Z

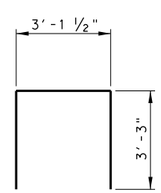

BARS U

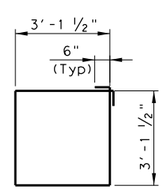

BARS S

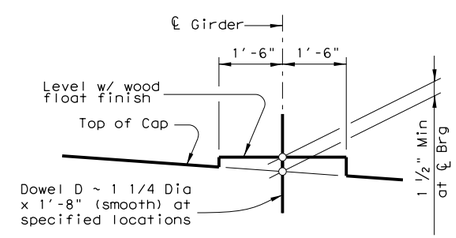

BEARING SEAT DETAIL

(Bearing surface must be clean and free of all loose material before placing bearing pad.)

GENERAL NOTES:

Designed according to AASHTO LRFD Bridge Design Specifications.
See Bridge layout for foundation type, size and length.
See Common Foundation Details (FD) standard sheet for all foundation details and notes.

Cover dimensions are clear dimensions, unless noted otherwise.
Reinforcing bar dimensions shown are out-to-out of bar.

MATERIAL NOTES:

Provide Class C concrete (f'c=3,600 psi).
Provide Grade 60 reinforing steel.
Galvanize dowel bars D.

Calculated Foundation Load = 48 tons/pile
HL93 LOADING

STATE OF TEXAS
JORGE A. MADRIGAL
97243
LICENSED PROFESSIONAL ENGINEER
06/11/2024

SH 550

INTERIOR BENT No. 3

SB MAINLANE
UPRR #2 OVERPASS

RMA
CAMERON COUNTY REGIONAL MOBILITY AUTHORITY

L&G Engineering
Highway / Civil
Structural / Bridge
Environmental
Firm No.: F-4105
2100 W. Expressway 83
Mercedes, TX. 78570
Phone : (956) 565-0613
Fax : (956) 565-4018
903 S. Stewart Rd., Ste. 10
Mission, TX. 78572
Phone : (956) 584-1909
Fax : (956) 585-1927

DRAWING PREPARED BY: L&G ENGINEERING

SHEET 1 OF 1

FED. RD. DIV. NO.	FEDERAL AID PROJECT NO.		SHEET NO.
6			

DGN:	STATE	DIST.	COUNTY
CHK DGN:	TEXAS	PHARR	CAMERON

DWG:	CONT.	SECT.	JOB	HIGHWAY NO.
CHK DWG:	0684	01	068	SH550

K:\CCRMA\SH 550\BRIDGES\Bents\UPRR(SB)\SH550*BentDet*UPRR3*SBML*01.dgn

6/11/2024

Docusign Envelope ID: D24B0E46-A040-4DCF-9159-2076E4A3664D

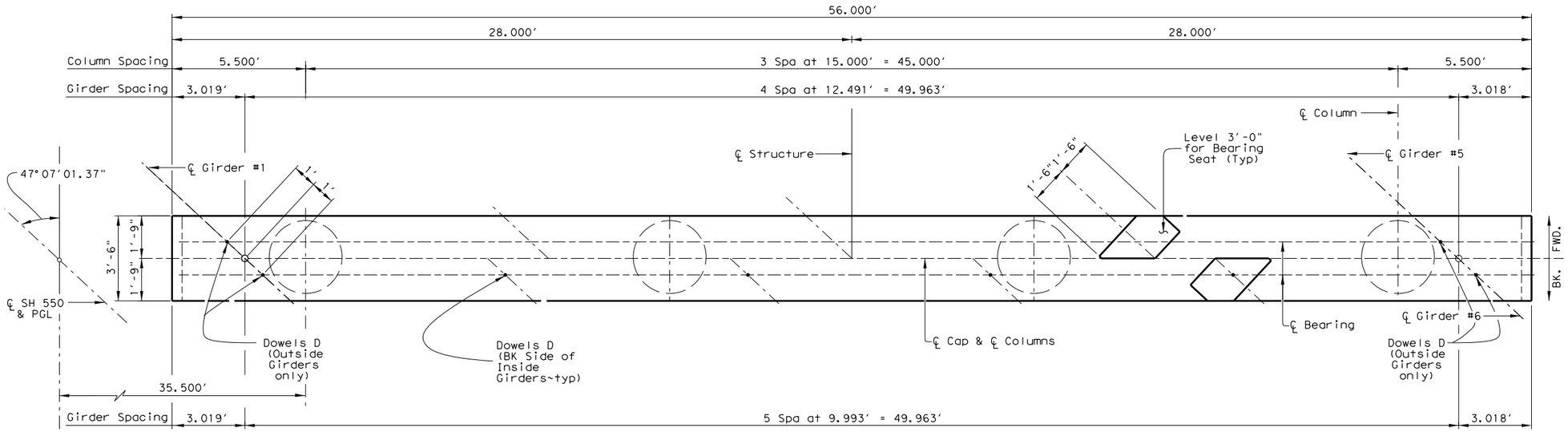

PLAN

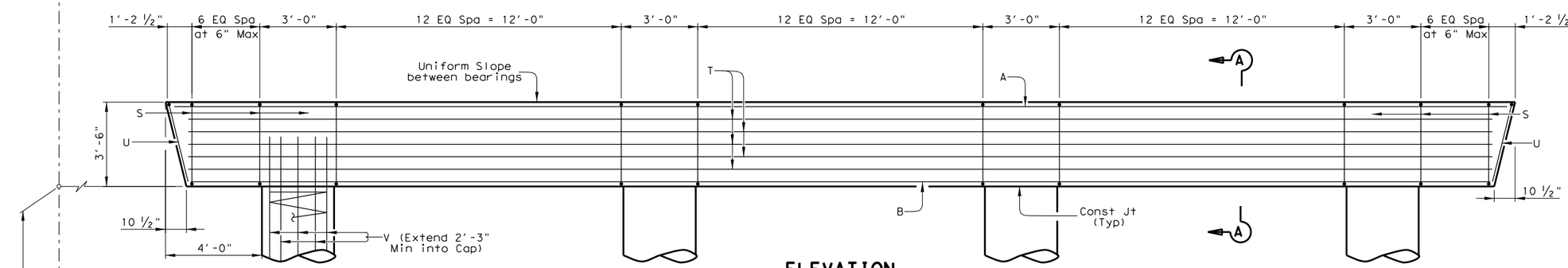

ELEVATION

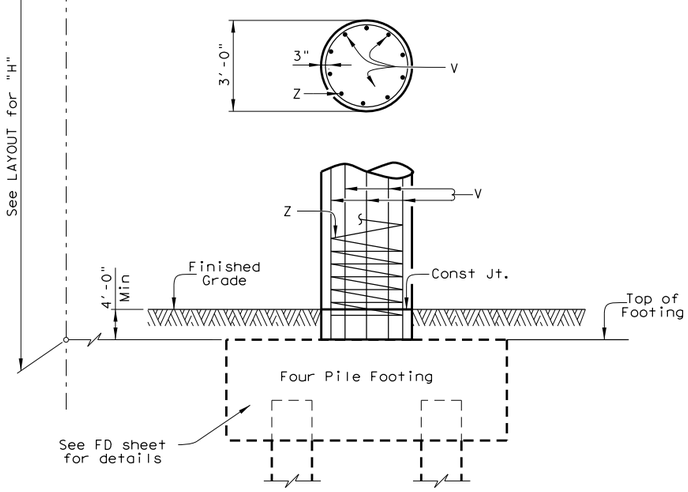

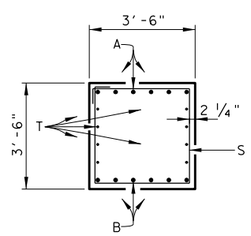

SECTION A-A

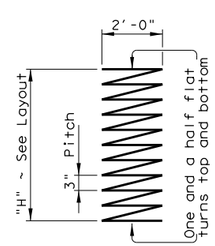

BARS Z

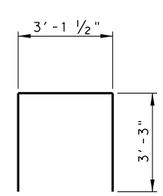

BARS U

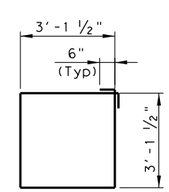

BARS S

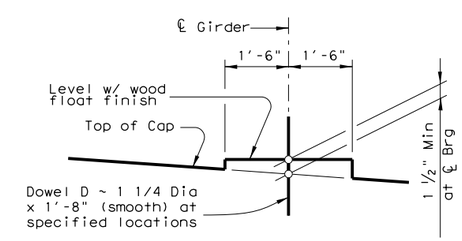

BEARING SEAT DETAIL

(Bearing surface must be clean and free of all loose material before placing bearing pad.)

TABLE OF ESTIMATED QUANTITIES

Bar	No.	Size	Length	Weight
A	6	#11	55'-8"	1775
B	6	#11	53'-9"	1713
D	8	#9	1'-8"	45
S	53	#5	13'-6"	746
T	8	#5	53'-9"	448
U	2	#5	9'-7 ½"	20
V	40	#9	31'-3"	4250
Z	4	#3	934'-8"	1406
Reinforcing Steel			Lb	10403
Class "C" Concrete (Cap)			CY	25.3
Class "C" Concrete (Col) ①			CY	30.4
Class "C" Concrete (Ftg)			CY	25.2
Class "C" Concrete Total			CY	80.9

① For each linear foot variation in "H" value, make the following adjustments:
Bars V length, 1'-0"
Bars Z length, 31'-5"
Reinforcing Steel, 165 Lb
Class "C" Conc. (Col), 1.047 CY

GENERAL NOTES:

Designed according to AASHTO LRFD Bridge Design Specifications.
See Bridge layout for foundation type, size and length.
See Common Foundation Details (FD) standard sheet for all foundation details and notes.

Cover dimensions are clear dimensions, unless noted otherwise.
Reinforcing bar dimensions shown are out-to-out of bar.

MATERIAL NOTES:

Provide Class C concrete (f'c=3,600 psi).
Provide Grade 60 reinforing steel.
Galvanize dowel bars D.

Calculated Foundation Load = 48 tons/pile

HL93 LOADING

STATE OF TEXAS
JORGE A. MADRIGAL
97243
LICENSED PROFESSIONAL ENGINEER
06/11/2024

SH 550

INTERIOR BENT No. 4

SB MAINLANE
UPRR #2 OVERPASS

RMA
CAMERON COUNTY REGIONAL MOBILITY AUTHORITY

L&G Engineering
Highway / Civil
Structural / Bridge
Environmental
Firm No.: F-4105
2100 W. Expressway 83
Mercedes, TX. 78570
Phone : (956) 565-3613
Fax : (956) 565-3016
903 S. Stewart Rd., Ste. 10
Mission, TX. 78572
Phone : (956) 585-1909
Fax : (956) 585-1927

DRAWING PREPARED BY: L&G ENGINEERING

SHEET 1 OF 1

FED. RD. DIV. NO.	FEDERAL AID PROJECT NO.		SHEET NO.
6			

DGN:	STATE	DIST.	COUNTY	
CHK DGN:	TEXAS	PHARR	CAMERON	
DWG:	CONT.	SECT.	JOB	HIGHWAY NO.
CHK DWG:	0684	01	068	SH550

K:\CCRMA\SH 550\BRIDGES\Bents\UPRR(SB)\SH550+BentDet+UPRR4+SBML*01.dgn

6/11/2024

Docusign Envelope ID: D24B0E46-A040-4DCF-9159-2076E4A3664D

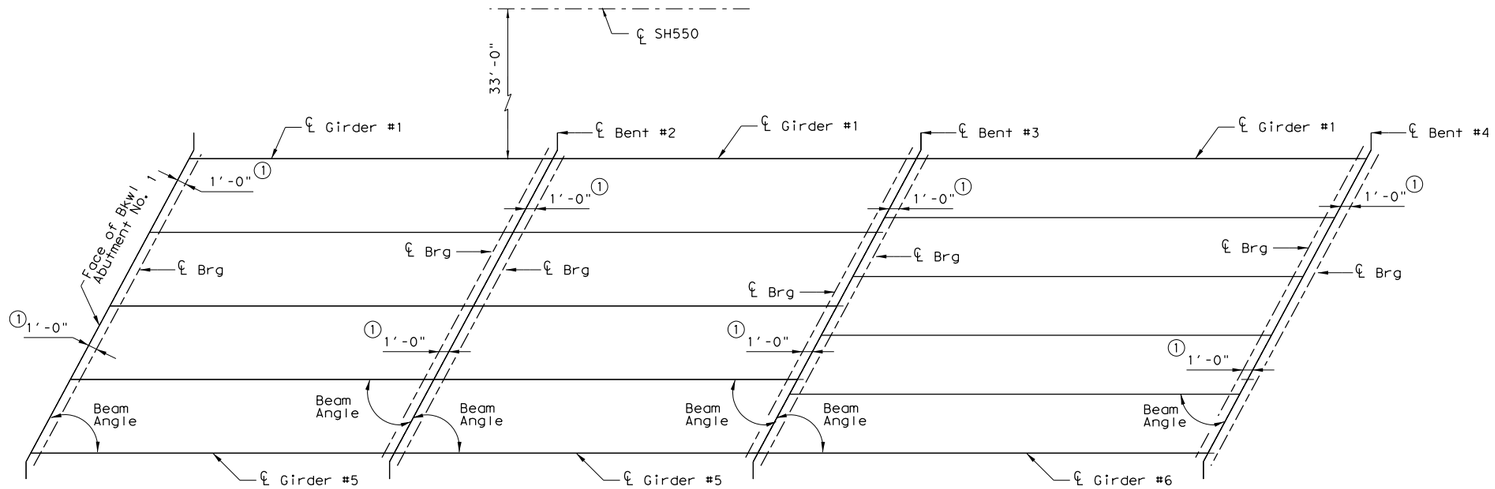

STATE OF TEXAS
JORGE A. MADRIGAL
97243
LICENSED PROFESSIONAL ENGINEER
06/11/2024

SPAN 1

(Type Tx40 Girder)

BENT REPORT

BENT NO. 1 (S 89 45 52.68 E)
DISTANCE BETWEEN STATION LINE AND BEAM 1, 48.494 R

		BEAM SPAC. (C.L. BENT)	BEAM ANGLE D M S
SPAN 1	BEAM 1	0.000	42 52 59
	BEAM 2	12.491	42 52 59
	BEAM 3	12.491	42 52 59
	BEAM 4	12.491	42 52 59
	BEAM 5	12.491	42 52 59
	TOTAL	49.963	

BENT NO. 2 (S 89 45 52.68 E)
DISTANCE BETWEEN STATION LINE AND BEAM 1, 48.494 R

		BEAM SPAC. (C.L. BENT)	BEAM ANGLE D M S
SPAN 1	BEAM 1	0.000	42 52 59
	BEAM 2	12.491	42 52 59
	BEAM 3	12.491	42 52 59
	BEAM 4	12.491	42 52 59
	BEAM 5	12.491	42 52 59
	TOTAL	49.963	

BEAM REPORT

BEAM REPORT, SPAN 1

	HORIZONTAL DISTANCE C-C BENT	C-C BRG.	TRUE DISTANCE② BOT. BM. FLG.	BEAM SLOPE
BEAM 1	80.000	77.530	79.38	0.0072
BEAM 2	80.000	77.530	79.38	0.0075
BEAM 3	80.000	77.530	79.39	0.0078
BEAM 4	80.000	77.530	79.39	0.0081
BEAM 5	80.000	77.530	79.39	0.0083

SPAN 2

(Type Tx40 Girder)

BENT REPORT

BENT NO. 2 (S 89 45 52.68 E)
DISTANCE BETWEEN STATION LINE AND BEAM 1, 48.494 R

		BEAM SPAC. (C.L. BENT)	BEAM ANGLE D M S
SPAN 2	BEAM 1	0.000	42 52 59
	BEAM 2	12.491	42 52 59
	BEAM 3	12.491	42 52 59
	BEAM 4	12.491	42 52 59
	BEAM 5	12.491	42 52 59
	TOTAL	49.963	

BENT NO. 3 (S 89 45 52.68 E)
DISTANCE BETWEEN STATION LINE AND BEAM 1, 48.494 R

		BEAM SPAC. (C.L. BENT)	BEAM ANGLE D M S
SPAN 2	BEAM 1	0.000	42 52 59
	BEAM 2	12.491	42 52 59
	BEAM 3	12.491	42 52 59
	BEAM 4	12.491	42 52 59
	BEAM 5	12.491	42 52 59
	TOTAL	49.963	

BEAM REPORT

BEAM REPORT, SPAN 2

	HORIZONTAL DISTANCE C-C BENT	C-C BRG.	TRUE DISTANCE② BOT. BM. FLG.	BEAM SLOPE
BEAM 1	80.000	78.000	79.50	0.0049
BEAM 2	80.000	78.000	79.50	0.0052
BEAM 3	80.000	78.000	79.50	0.0054
BEAM 4	80.000	78.000	79.50	0.0057
BEAM 5	80.000	78.000	79.50	0.0060

SPAN 3

(Type Tx40 Girder)

BENT REPORT

BENT NO. 3 (S 89 45 52.68 E)
DISTANCE BETWEEN STATION LINE AND BEAM 1, 48.494 R

		BEAM SPAC. (C.L. BENT)	BEAM ANGLE D M S
SPAN 3	BEAM 1	0.000	42 52 59
	BEAM 2	9.993	42 52 59
	BEAM 3	9.993	42 52 59
	BEAM 4	9.993	42 52 59
	BEAM 5	9.993	42 52 59
	BEAM 6	9.993	42 52 59
	TOTAL	49.963	

BENT NO. 4 (S 89 45 52.68 E)
DISTANCE BETWEEN STATION LINE AND BEAM 1, 48.494 R

		BEAM SPAC. (C.L. BENT)	BEAM ANGLE D M S
SPAN 3	BEAM 1	0.000	42 52 59
	BEAM 2	9.993	42 52 59
	BEAM 3	9.993	42 52 59
	BEAM 4	9.993	42 52 59
	BEAM 5	9.993	42 52 59
	BEAM 6	9.993	42 52 59
	TOTAL	49.963	

BEAM REPORT

BEAM REPORT, SPAN 3

	HORIZONTAL DISTANCE C-C BENT	C-C BRG.	TRUE DISTANCE② BOT. BM. FLG.	BEAM SLOPE
BEAM 1	100.000	98.000	99.50	0.0022
BEAM 2	100.000	98.000	99.50	0.0024
BEAM 3	100.000	98.000	99.50	0.0026
BEAM 4	100.000	98.000	99.50	0.0029
BEAM 5	100.000	98.000	99.50	0.0031
BEAM 6	100.000	98.000	99.50	0.0033

①See IGEB Standard for orientation of dimension.

②Girder lengths shown are bottom flange lengths with adjustments made for beam slope.

HL93 LOADING

SH 550

GIRDER LAYOUT SPANS #1-3

SB MAINLANE
UPRR #2 OVERPASS

RMA
CAMERON COUNTY REGIONAL MOBILITY AUTHORITY

L & G Engineering
Highway / Civil
Structural / Bridge
Environmental
Firm No. : F-4105

2100 W. Expressway 83
Mercedes, TX. 78570
Phone : (956) 565-3815
Fax : (956) 565-3018

303 S. Stewart Rd, Ste. 10
Weslaco, TX. 78596
Phone : (956) 565-1999
Fax : (956) 565-1927

DRAWING PREPARED BY: L&G ENGINEERING

SHEET 1 OF 1

FED. RD. DIV. NO.	FEDERAL AID PROJECT NO.		SHEET NO.
6			

DGN:	STATE	DIST.	COUNTY	
CHK DGN:	TEXAS	PHARR	CAMERON	
DWG:	CONT.	SECT.	JOB	HIGHWAY NO.
CHK DWG:	0684	01	068	SH550

K:\CCRMA\SH 550\BRIDGES\Girder Layouts\GirderLayout*SH550*UPRR(SB).dgn

6/11/2024

Docusign Envelope ID: D24B0E46-A040-4DCF-9159-2076E4A3664D

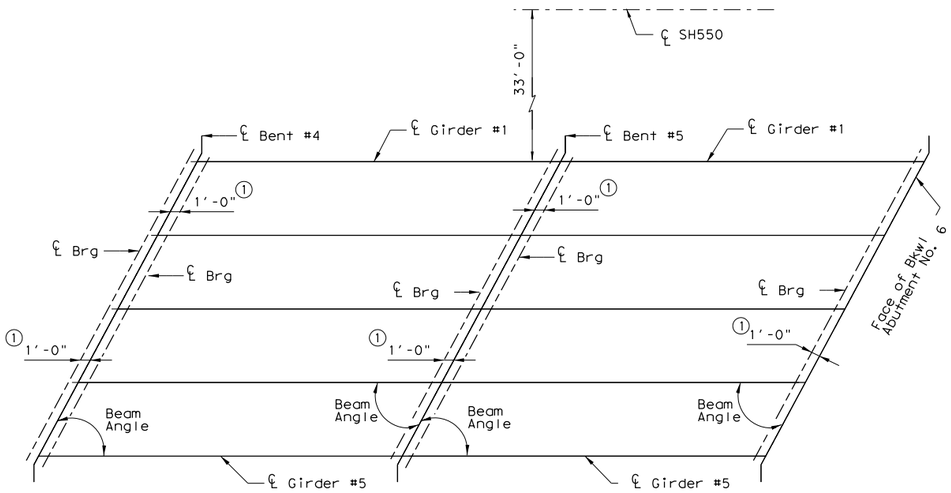

SPAN 4

(Type Tx40 Girder)

BENT REPORT

BENT NO. 4 (S 89 45 52.68 E)
DISTANCE BETWEEN STATION LINE AND BEAM 1, 48.494 R

		BEAM SPAC. (C.L. BENT)	BEAM ANGLE D M S
SPAN 4	BEAM 1	0.000	42 52 59
	BEAM 2	12.491	42 52 59
	BEAM 3	12.491	42 52 59
	BEAM 4	12.491	42 52 59
	BEAM 5	12.491	42 52 59
	TOTAL	49.963	

BENT NO. 5 (S 89 45 52.68 E)
DISTANCE BETWEEN STATION LINE AND BEAM 1, 48.494 R

		BEAM SPAC. (C.L. BENT)	BEAM ANGLE D M S
SPAN 4	BEAM 1	0.000	42 52 59
	BEAM 2	12.491	42 52 59
	BEAM 3	12.491	42 52 59
	BEAM 4	12.491	42 52 59
	BEAM 5	12.491	42 52 59
	TOTAL	49.963	

BEAM REPORT

BEAM REPORT, SPAN 4

	HORIZONTAL DISTANCE C-C BENT	C-C BRG.	TRUE DISTANCE BOT. BM. FLG.	BEAM SLOPE
BEAM 1	80.000	78.000	79.50	-0.0005
BEAM 2	80.000	78.000	79.50	-0.0002
BEAM 3	80.000	78.000	79.50	0.0001
BEAM 4	80.000	78.000	79.50	0.0004
BEAM 5	80.000	78.000	79.50	0.0006

SPAN 5

(Type Tx40 Girder)

BENT REPORT

BENT NO. 5 (S 89 45 52.68 E)
DISTANCE BETWEEN STATION LINE AND BEAM 1, 48.494 R

		BEAM SPAC. (C.L. BENT)	BEAM ANGLE D M S
SPAN 5	BEAM 1	0.000	42 52 59
	BEAM 2	12.491	42 52 59
	BEAM 3	12.491	42 52 59
	BEAM 4	12.491	42 52 59
	BEAM 5	12.491	42 52 59
	TOTAL	49.963	

BENT NO. 6 (S 89 45 52.68 E)
DISTANCE BETWEEN STATION LINE AND BEAM 1, 48.494 R

		BEAM SPAC. (C.L. BENT)	BEAM ANGLE D M S
SPAN 5	BEAM 1	0.000	42 52 59
	BEAM 2	12.491	42 52 59
	BEAM 3	12.491	42 52 59
	BEAM 4	12.491	42 52 59
	BEAM 5	12.491	42 52 59
	TOTAL	49.963	

BEAM REPORT

BEAM REPORT, SPAN 5

	HORIZONTAL DISTANCE C-C BENT	C-C BRG.	TRUE DISTANCE BOT. BM. FLG.	BEAM SLOPE
BEAM 1	80.000	77.530	79.38	-0.0028
BEAM 2	80.000	77.530	79.38	-0.0026
BEAM 3	80.000	77.530	79.38	-0.0023
BEAM 4	80.000	77.530	79.38	-0.0020
BEAM 5	80.000	77.530	79.38	-0.0017

①See IGEB Standard for orientation of dimension.

②Girder lengths shown are bottom flange lengths with adjustments made for beam slope.

HL93 LOADING

SH 550

GIRDER LAYOUT SPANS #4-5

SB MAINLANE
UPRR #2 OVERPASS

STATE OF TEXAS
JORGE A. MADRIGAL
97243
LICENSED PROFESSIONAL ENGINEER
06/11/2024

RMA
CAMERON COUNTY REGIONAL MOBILITY AUTHORITY

L&G Engineering
Highway / Civil
Structural / Bridge
Environmental
Firm No.: F-4105
2100 W. Expressway 83
Harlingen, TX. 78550
Phone: (956) 565-6013
Fax: (956) 565-6018
903 S. Stewart Rd., Ste. 10
Mission, TX. 78572
Phone: (956) 585-1909
Fax: (956) 585-1927

DRAWING PREPARED BY: L&G ENGINEERING

SHEET 1 OF 1

FED. RD. DIV. NO.	FEDERAL AID PROJECT NO.		SHEET NO.
6			

DGN:	STATE	DIST.	COUNTY	
CHK DGN:	TEXAS	PHARR	CAMERON	
DWG:	CONT.	SECT.	JOB	HIGHWAY NO.
CHK DWG:	0684	01	068	SH550

K:\CCRMA\SH 550\BRIDGES\Girder Layouts\GirderLayout*SH550*UPRR(SB).dgn

6/11/2024

Docusign Envelope ID: D24B0E46-A040-4DCF-9159-2076E4A3664D

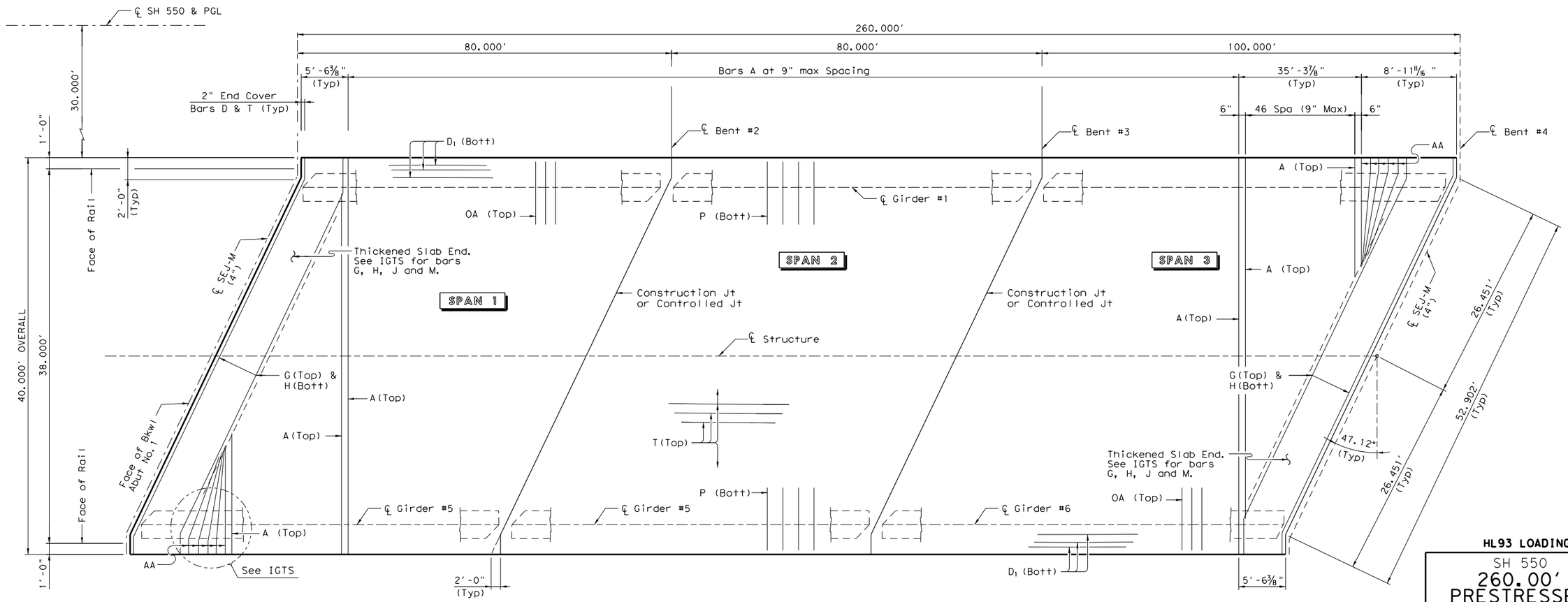

PLAN

HL93 LOADING

SH 550
260.00'
PRESTRESSED
CONCRETE
GIRDER UNIT
(SPANS #1-#3)

SB MAINLANE
UPRR #2 OVERPASS

RMA
CAMERON COUNTY REGIONAL MOBILITY AUTHORITY

L&G Engineering
Highway / Civil
Structural / Bridge
Environmental
Firm No. : F-4105

2100 W. Expressway 83
Weslaco, TX. 78596
Phone : (956) 565-6013
Fax : (956) 565-6018

900 S. Stewart Rd., Ste. 10
Mission, TX. 78572
Phone : (956) 585-1909
Fax : (956) 585-1927

STATE OF TEXAS
JORGE A. MADRIGAL
97243
LICENSED PROFESSIONAL ENGINEER
06/11/2024

DRAWING PREPARED BY: L&G ENGINEERING				
SHEET 1 OF 2				
FED. RD. DIV. NO.	FEDERAL AID PROJECT NO.			SHEET NO.
6				
DGN:	STATE	DIST.	COUNTY	
CHK DGN:	TEXAS	PHARR	CAMERON	
DWG:	CONT.	SECT.	JOB	HIGHWAY NO.
CHK DWG:	0684	01	068	SH550

6/11/2024 K:\CCRMA\SH 550\BRIDGES\Span Layouts\UPRR(SB)\Span Units*SH 550@UPRR (SB)*Span1-3.dgn

Docusign Envelope ID: D24B0E46-A040-4DCF-9159-2076E4A3664D

Span No.	Girder No.	"A" Ft	"B" Ft
1	All	0.064	0.091
2	All	0.065	0.093
3	All	0.130	0.185

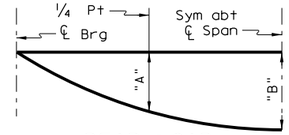

DEAD LOAD DEFLECTION DIAGRAM

Calculated deflections shown are due to the concrete slab on interior girders only (Ec = 5000 ksi). Adjust values as required for exterior girders and if optional slab forming is used. These values may require field verification.

TABLE OF SECTION DEPTHS

Span No.	Girder No.	"X" at ℄ Brg	"Y" at ℄ Brg	"Z" at ℄ Span
1	All	11"	4'-3"	9⅝"
2	All	11"	4'-3"	9⅝"
3	All	11¼"	4'-3 ¼"	9⅝"

BAR TABLE

BAR	SIZE
A	#4
AA	#5
D	#4
G	#4
H	#4
J	#4
K	#4
M	#4
OA	#5
P	#4
T	#4

TABLE OF ESTIMATED QUANTITIES

SPAN	REINF CONC SLAB	PRESTRESSED CONC GIRDER (Type Tx40)	REINFORCING STEEL
NO.	SF	③ LF	Lb ②
1	3200	396.90	7360
2	3200	397.50	7360
3	4000	597.00	9200
TOTAL	10400	1391.40	23920

② Reinforcing steel weight is calculated using an approximate factor of 2.3 Lbs per Sq Ft.

③ Lengths shown are bottom flange lengths with adjustments made for girder slope.
SPAN 1 ~ 79.38 LF each girder
SPAN 2 ~ 79.50 LF each girder
SPAN 3 ~ 99.50 LF each girder

GENERAL NOTES:

Designed according to AASHTO LRFD Bridge Design Specifications.
See IGTS standard for Thickened slab End details and quantity adjustments.
See PCP and PCP-FAB for panel details not shown.
See IGMS standard for miscellaneous details.
See appicable rail details for rail anchorage in slab.
See PMDF standard for details and quantity adjustments if this option is used.

Cover dimensions are clear dimensions, unless noted otherwise.

MATERIAL NOTES:

Provide Class S concrete (f'c=4,000 psi).
Provide Grade 60 reinforing steel.
Provide bar laps, where required, as follow:
Uncoated ~ #4 = 1'-7"
Deformed welded Wire Reinforcement (WWR) (ASTM A1064) of equal size and spacing may be substituted for Bars A, AA, D, OA, P or T unless noted otherwise.

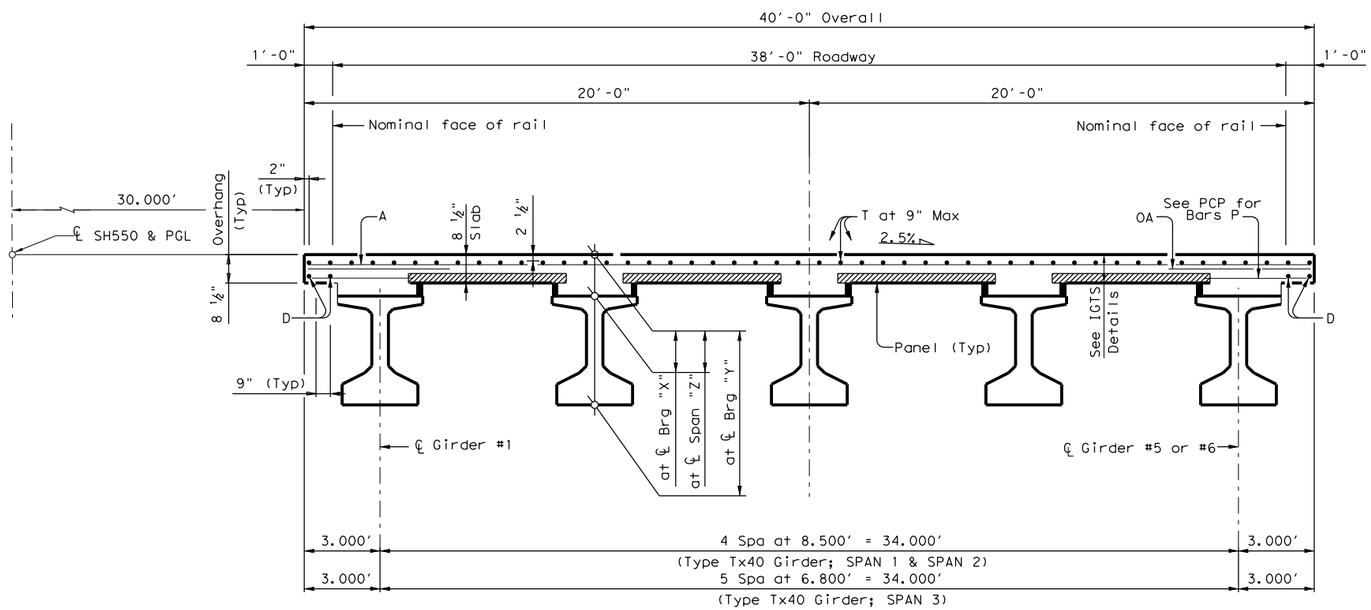

TYPICAL TRANSVERSE SECTION

HL93 LOADING

SH 550
260.00'
PRESTRESSED CONCRETE GIRDER UNIT
(SPANS #1-#3)

SB MAINLANE
UPRR #2 OVERPASS

RMA
CAMERON COUNTY REGIONAL MOBILITY AUTHORITY

L&G Engineering
Highway / Civil
Structural / Bridge
Environmental
Firm No.: F-4105
2100 W. Expressway 83
Mercedes, TX. 78570
Phone : (956) 565-0813
Fax : (956) 565-4018
900 S. Stewart Rd., Ste. 10
Mission, TX. 78572
Phone : (956) 585-1909
Fax : (956) 585-1927

STATE OF TEXAS
JORGE A. MADRIGAL
97243
LICENSED PROFESSIONAL ENGINEER
06/11/2024

DRAWING PREPARED BY: L&G ENGINEERING			
SHEET 2 OF 2			
FED. RD. DIV. NO.	FEDERAL AID PROJECT NO.		SHEET NO.
6			
DGN:	STATE	DIST.	COUNTY
CHK DGN:	TEXAS	PHARR	CAMERON
DWG:	CONT.	SECT.	JOB	HIGHWAY NO.
CHK DWG:	0684	01	068	SH550

6/11/2024 K:\CCRMA\SH 550\BRIDGES\Span Layouts\UPRR(SB)\Span Units*Trans Sec*SH550*UPRR(SB)1-3.dgn

Docusign Envelope ID: D24B0E46-A040-4DCF-9159-2076E4A3664D

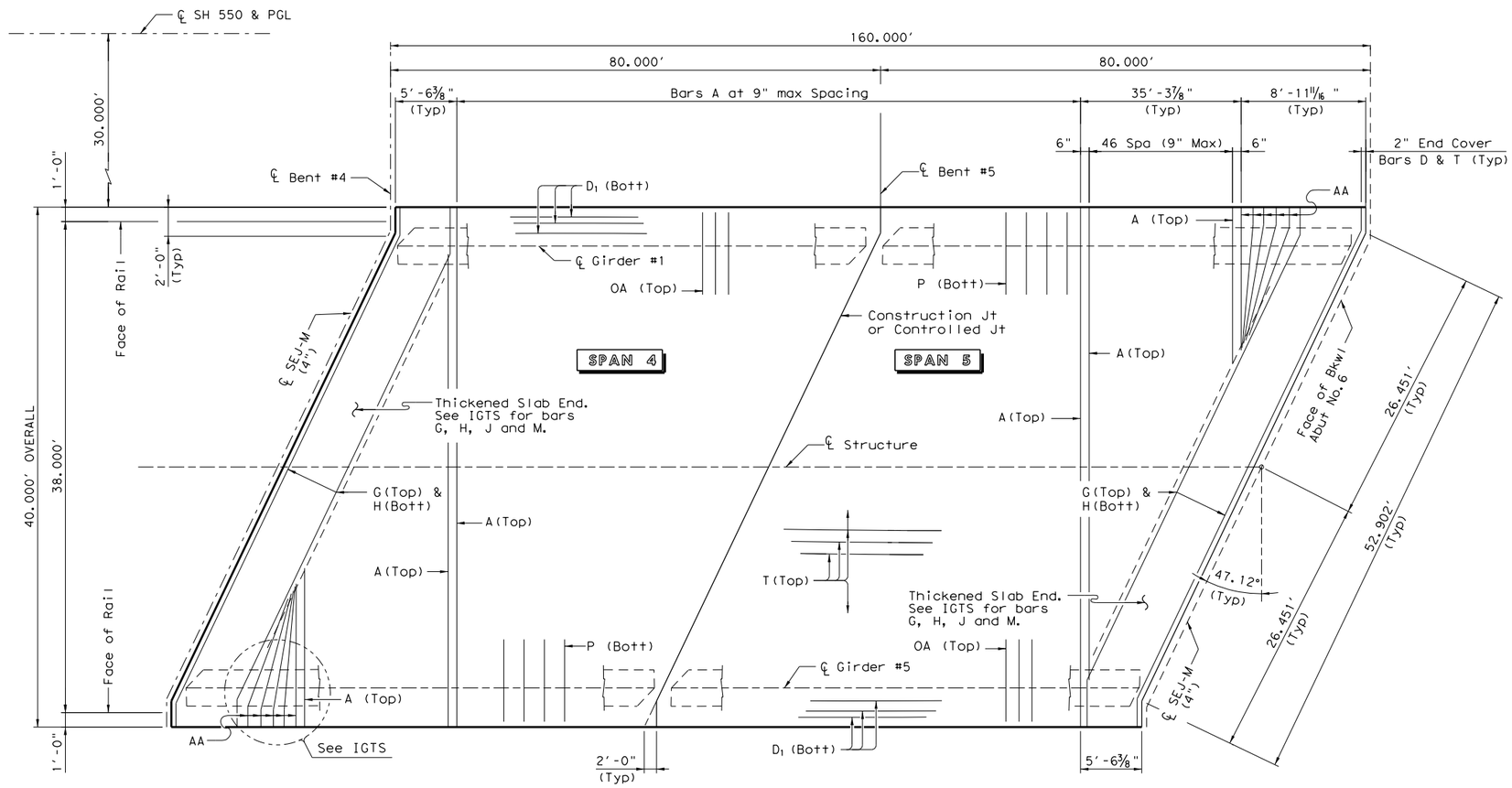

PLAN

HL93 LOADING

SH 550
160.00'
PRESTRESSED
CONCRETE
GIRDER UNIT
(SPANS #4 &#5)

SB MAINLANE
UPRR #2 OVERPASS

RMA
CAMERON COUNTY REGIONAL MOBILITY AUTHORITY

L&G Engineering
Highway / Civil
Structural / Bridge
Environmental
Firm No.: F-4105
2100 W. Expressway 83
Mercedes, TX. 78570
Phone : (956) 565-0613
Fax : (956) 565-4018
903 S. Stewart Rd., Ste. 10
Mission, TX. 78572
Phone : (956) 585-1909
Fax : (956) 585-1927

STATE OF TEXAS
JORGE A. MADRIGAL
97243
LICENSED
PROFESSIONAL ENGINEER
06/11/2024

DRAWING PREPARED BY: L&G ENGINEERING				
SHEET 1 OF 2				
FED. RD. DIV. NO.	FEDERAL AID PROJECT NO.			SHEET NO.
6				
DGN:	STATE	DIST.	COUNTY	
CHK DGN:	TEXAS	PHARR	CAMERON	
DWG:	CONT.	SECT.	JOB	HIGHWAY NO.
CHK DWG:	0684	01	068	SH550

6/11/2024 K:\CCRMA\SH 550\BRIDGES\Span Layouts\UPRR(SB)\Span Units*SH 550@UPRR (SB)*Span485.dgn

Docusign Envelope ID: D24B0E46-A040-4DCF-9159-2076E4A3664D

Span No.	Girder No.	"A" Ft	"B" Ft
4	All	0.065	0.093
5	All	0.064	0.091

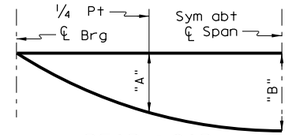

DEAD LOAD DEFLECTION DIAGRAM

Calculated deflections shown are due to the concrete slab on interior girders only (Ec = 5000 ksi). Adjust values as required for exterior girders and if optional slab forming is used. These values may require field verification.

TABLE OF SECTION DEPTHS

Span No.	Girder No.	"X" at ℄ Brg	"Y" at ℄ Brg	"Z" at ℄ Span
4	All	11"	4'-3"	9⅝"
5	All	11"	4'-3"	9⅝"

BAR TABLE

BAR	SIZE
A	#4
AA	#5
D	#4
G	#4
H	#4
J	#4
K	#4
M	#4
OA	#5
P	#4
T	#4

TABLE OF ESTIMATED QUANTITIES

SPAN	REINF CONC SLAB	PRESTRESSED CONC GIRDER (Type Tx40)	REINFORCING STEEL
NO.	SF	③ LF	Lb ②
4	3200	397.50	7360
5	3200	396.90	7360
TOTAL	6400	794.40	14720

② Reinforcing steel weight is calculated using an approximate factor of 2.3 Lbs per Sq Ft.

③ Lengths shown are bottom flange lengths with adjustments made for girder slope.
SPAN 4 ~ 79.50 LF each girder
SPAN 5 ~ 79.38 LF each girder

GENERAL NOTES:

Designed according to AASHTO LRFD Bridge Design Specifications.
See IGTS standard for Thickened slab End details and quantity adjustments.
See PCP and PCP-FAB for panel details not shown.
See PCP(O) and PCP(O)-FAB for precast overhang panel details if this option is used.
See IGMS standard for miscellaneous details.
See appicable rail details for rail anchorage in slab.
See PMDF standard for details and quantity adjustments if this option is used.

Cover dimensions are clear dimensions, unless noted otherwise.

MATERIAL NOTES:

Provide Class S concrete (f'c=4,000 psi).
Provide Grade 60 reinforing steel.
Provide bar laps, where required, as follow:
Uncoated ~ #4 = 1'-7"
Deformed welded Wire Reinforcement (WWR) (ASTM A1064) of equal size and spacing may be substituted for Bars A, AA, D, OA, P or T unless noted otherwise.

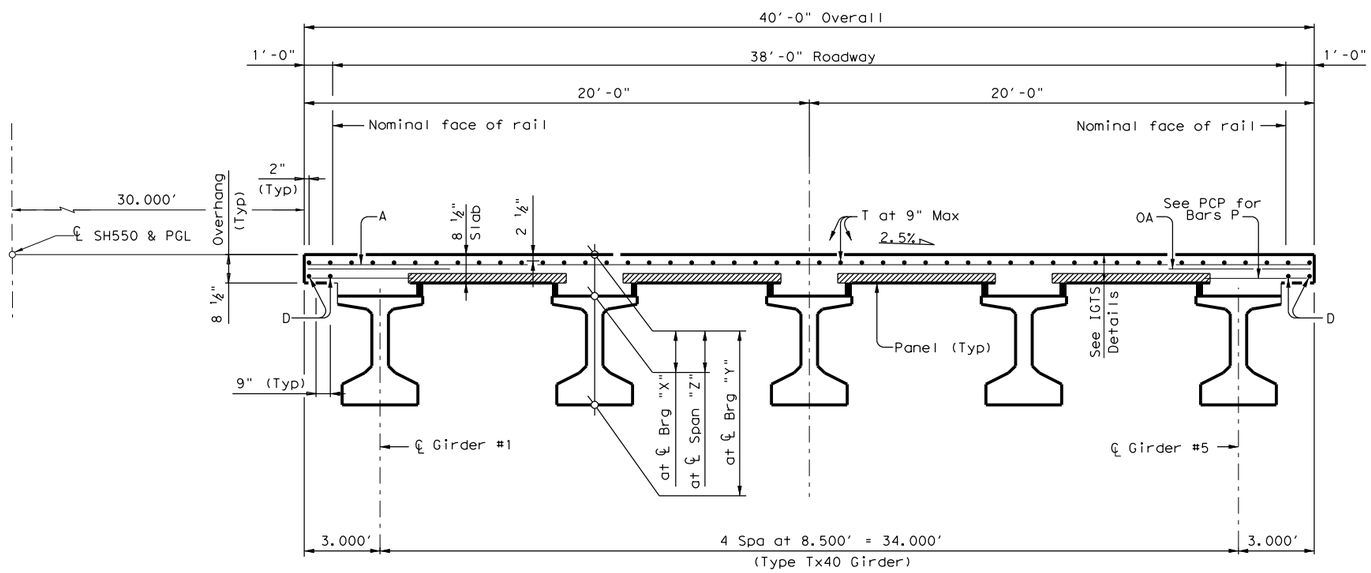

TYPICAL TRANSVERSE SECTION

HL93 LOADING

SH 550
160.00'
PRESTRESSED CONCRETE GIRDER UNIT
(SPANS #4 & #5)

SB MAINLANE
UPRR #2 OVERPASS

RMA
CAMERON COUNTY REGIONAL MOBILITY AUTHORITY

L&G Engineering
Highway / Civil
Structural / Bridge
Environmental
Firm No.: F-4105
2100 W. Expressway 83
Mercedes, TX. 78570
Phone : (956) 565-0813
Fax : (956) 565-4018
900 S. Stewart Rd., Ste. 10
Weslaco, TX. 78596
Phone : (956) 585-1909
Fax : (956) 585-1927

STATE OF TEXAS
JORGE A. MADRIGAL
97243
LICENSED PROFESSIONAL ENGINEER
06/11/2024

DRAWING PREPARED BY: L&G ENGINEERING			
SHEET 2 OF 2			
FED. RD. DIV. NO.	FEDERAL AID PROJECT NO.		SHEET NO.
6			763
DGN:	STATE	DIST.	COUNTY
CHK DGN:	TEXAS	PHARR	CAMERON
DWG:	CONT.	SECT.	JOB	HIGHWAY NO.
CHK DWG:	0684	01	068	SH550

6/11/2024 K:\CCRMA\SH 550\BRIDGES\Span Layouts\UPRR(SB)\Span Units*Trans Sec*SH550*UPRR(SB)485.dgn

Docusign Envelope ID: D24B0E46-A040-4DCF-9159-2076E4A3664D

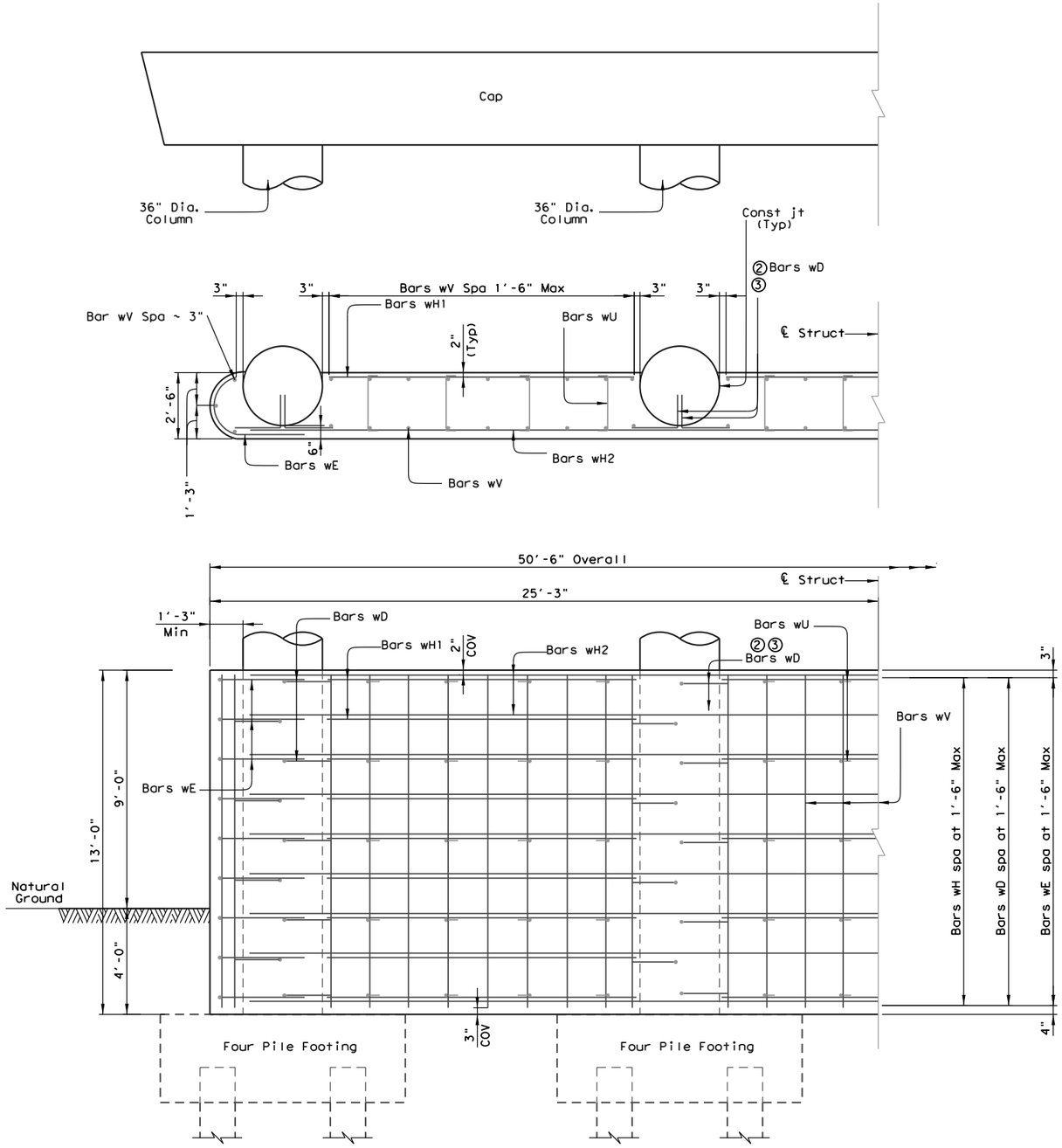

CRASH WALL DETAILS

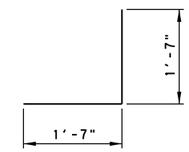

Bars wD

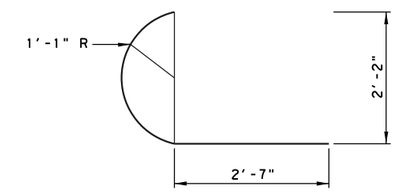

Bars wE

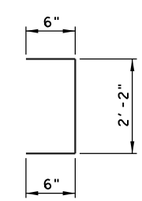

Bars wU

① TABLE OF ESTIMATED QUANTITIES

Bar	No.	Size	Length	Weight
wD	36	#6	3'-2"	171
wE	18	#6	5'-7"	152
wH1	27	#6	11'-6"	467
wH2	9	#6	48'-6"	656
wU	60	#4	3'-2"	127
wV	60	#6	12'-7"	1134
Reinforcing Steel			Lb	2707
Class"C"Concrete(Crash Wall)			CY	50.5

① Quantities are for one(1) Crash Wall Only

② Bars wD; embed 1'-3" Min into column. (Typ)

③ At Contractors's option, bars wD may be placed with the column or may be attached using an adhesive anchorage system with the anchorage end sloped 1:6 into column

GENERAL NOTES:

Designed according to AASHTO LRFD Bridge Design Specifications.
See Bridge layout for foundation type, size and length.
See Common Foundation Details (FD) standard sheet for all foundation details and notes.

Cover dimensions are clear dimensions, unless noted otherwise.
Reinforcing bar dimensions shown are out-to-out of bar.

MATERIAL NOTES:

Provide Class C concrete (f'c=3,600 psi).
Provide Grade 60 reinforing steel.

STATE OF TEXAS
JORGE A. MADRIGAL
97243
LICENSED
PROFESSIONAL ENGINEER
06/11/2024

HL93 LOADING

SH 550

CRASH WALL

NB & SB MAINLANE
UPRR #2 OVERPASS

RMA
CAMERON COUNTY REGIONAL MOBILITY AUTHORITY

L&G Engineering
Highway / Civil
Structural / Bridge
Environmental
Firm No.: F-4105
2100 W. Expressway 83
Mercedes, TX. 78570
Phone : (956) 565-3813
Fax : (956) 565-4058
900 S. Stewart Rd., Ste. 10
Mission, TX. 78572
Phone : (956) 584-1909
Fax : (956) 585-7927

DRAWING PREPARED BY: L&G ENGINEERING

SHEET 1 OF 1

FED. RD. DIV. NO.	FEDERAL AID PROJECT NO.		SHEET NO.
6			

DGN:	STATE	DIST.	COUNTY	
CHK DGN:	TEXAS	PHARR	CAMERON	
DWG:	CONT.	SECT.	JOB	HIGHWAY NO.
CHK DWG:	0684	01	068	SH550

K:\CCRMA\SH 550\BRIDGES\Bents\CrashWallDetails.dgn

3/3/2023

Docusign Envelope ID: D24B0E46-A040-4DCF-9159-2076E4A3664D

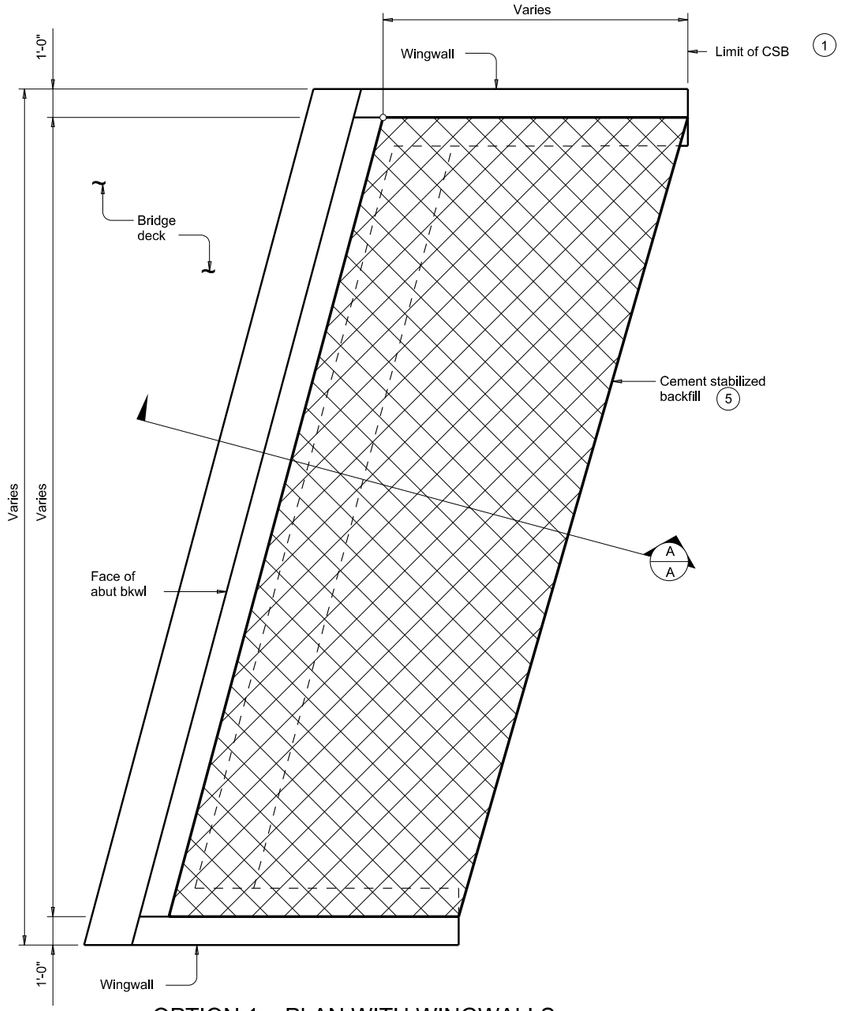

OPTION 1 ~ PLAN WITH WINGWALLS

Cast-in-place retaining walls similar.

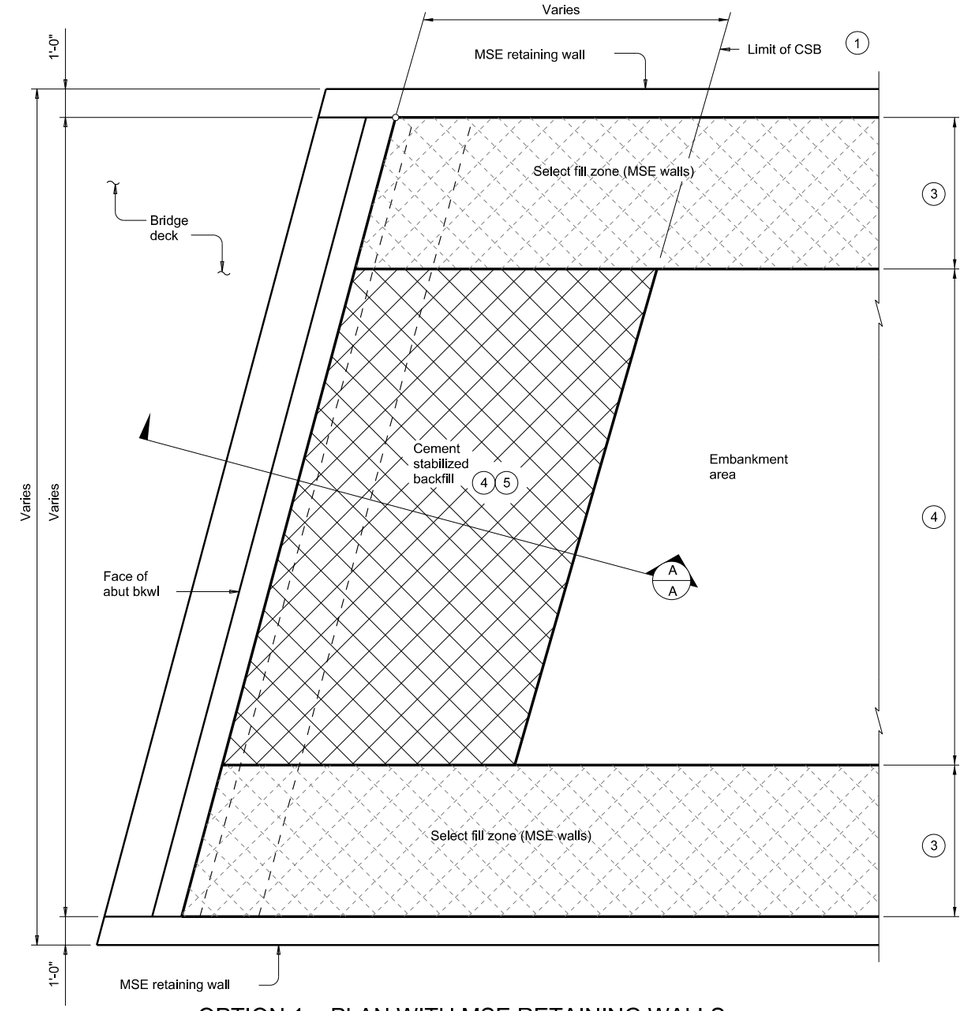

OPTION 1 ~ PLAN WITH MSE RETAINING WALLS

1. Usual limit of Cement Stabilized Backfill is at end of wingwall. Extend CSB limits as required to maintain a slope no steeper than 1:1 at bottom of backfill.
2. Bench backfill as shown with 12" (approximate) bench depths.
3. Where MSE retaining walls are present, adjust CSB limits to accommodate the select fill zone. See retaining wall details for additional information.
4. When distance between select fill zones is less than 5'-0", MSE select fill may be substituted for cement stabilized backfill with approval from the Engineer.
5. If shown in the plans flowable backfill can be used as a substitute for cement stabilized backfill with the following constraints:
   a). If flowable backfill is to be placed over MSE backfill then a filter fabric will be placed over the MSE backfill prior to placement of the flowable fill; and
   b). Place flowable fill in lifts not exceeding 2 feet in height, place each successive lift when the previous lift has stiffened/hardened (i.e. has lost its flowability).

GENERAL NOTES:

See the Bridge Layout for selected Option. Option 2 is intended for new construction requiring high plasticity embankment fill with a plasticity index (PI) greater than 30 or pavement built in poor native soil. Poor soils are defined as high plasticity clays or expansive clays. Option 1 is intended for construction only requiring PI controlled embankment fill or excavation in competent soils/rocks in order to construct the abutment.

Provide Cement Stabilized Backfill (CSB) meeting the requirements of Item 400, "Excavation and Backfill for Structures", to the limits shown at bridge abutments.

If required elsewhere in the plans, provide Flowable Backfill meeting the requirements of Item 401, "Flowable Backfill", to the limits shown at bridge abutments.

Details are drawn showing left forward skew. See Bridge Layout for actual skew direction.

These details do not apply when Concrete Block retaining walls are used in lieu of wingwalls.

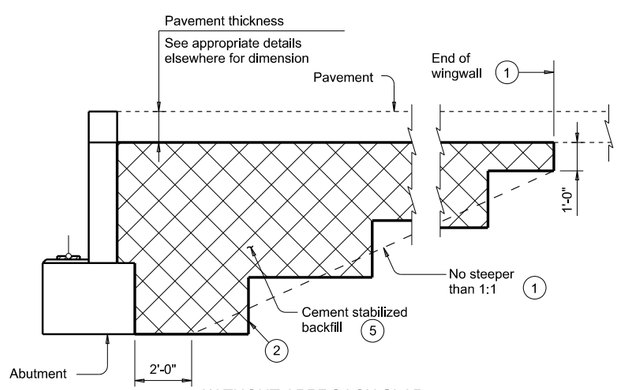

WITHOUT APPROACH SLAB

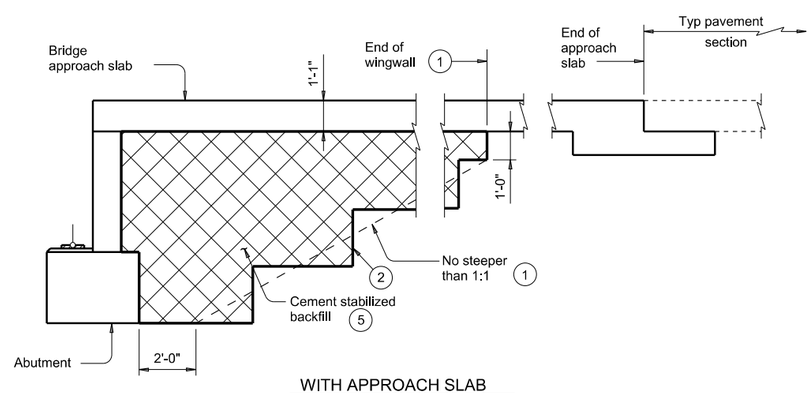

WITH APPROACH SLAB

(Showing BAS-C, BAS-A similar.)

SECTION A-A

DISCLAIMER:
The use of this standard is governed by the "Texas Engineering Practice Act". No warranty of any kind is made by TxDOT for any purpose whatsoever. TxDOT assumes no responsibility for the conversion of this standard to other formats or for incorrect results or damages resulting from its use.

DATE:
FILE:

SHEET 1 OF 2

Texas Department of Transportation

Bridge Division Standard

CEMENT STABILIZED ABUTMENT BACKFILL

BRIDGE ABUTMENT

CSAB

FILE: csabste1-20.dgn	DN: TxDOT	CK: TxDOT	DW: TxDOT	CK: TxDOT
©TxDOT April 2019	CONT	SECT	JOB	HIGHWAY
REVISIONS	0684	01	068	SH 550
02-20: Added Option 2.	DIST		COUNTY	SHEET NO.
	PHARR		CAMERON	235

Docusign Envelope ID: D24B0E46-A040-4DCF-9159-2076E4A3664D

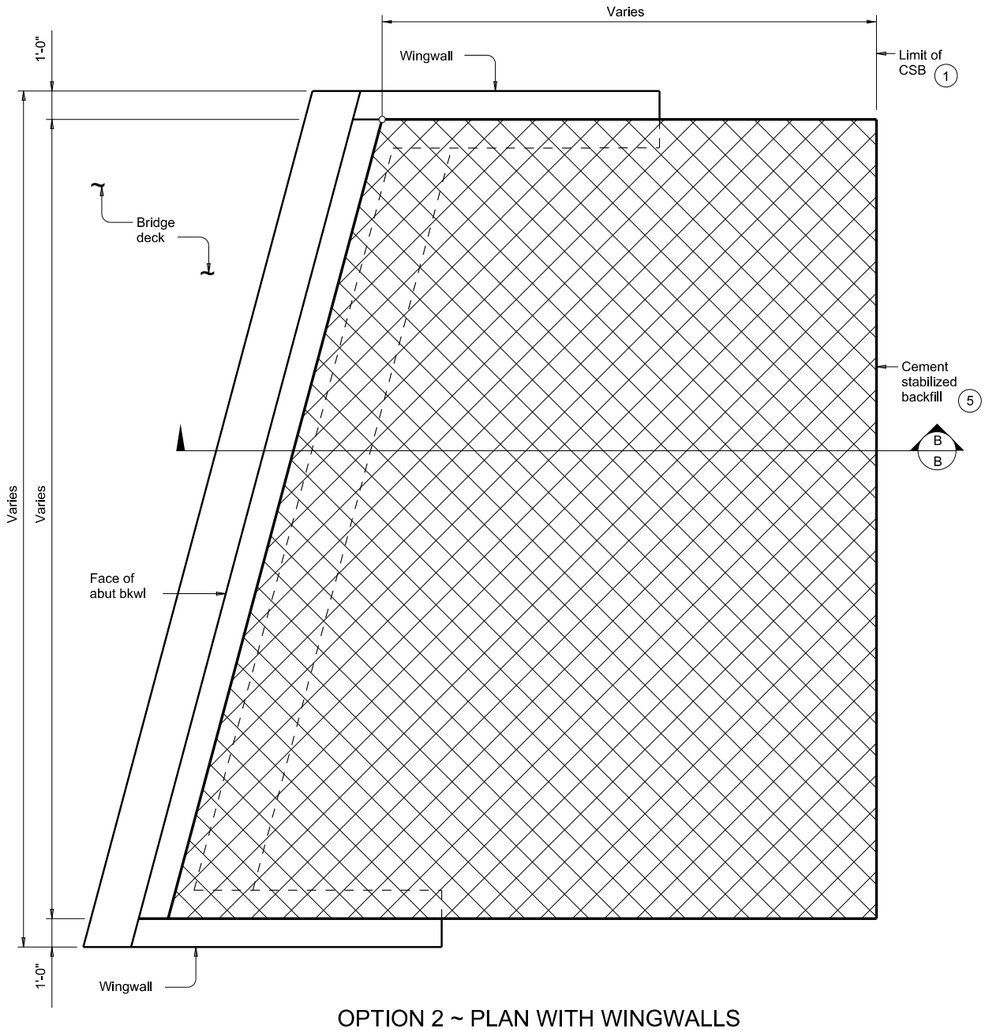

OPTION 2 ~ PLAN WITH WINGWALLS

Cast-in-place retaining walls similar.

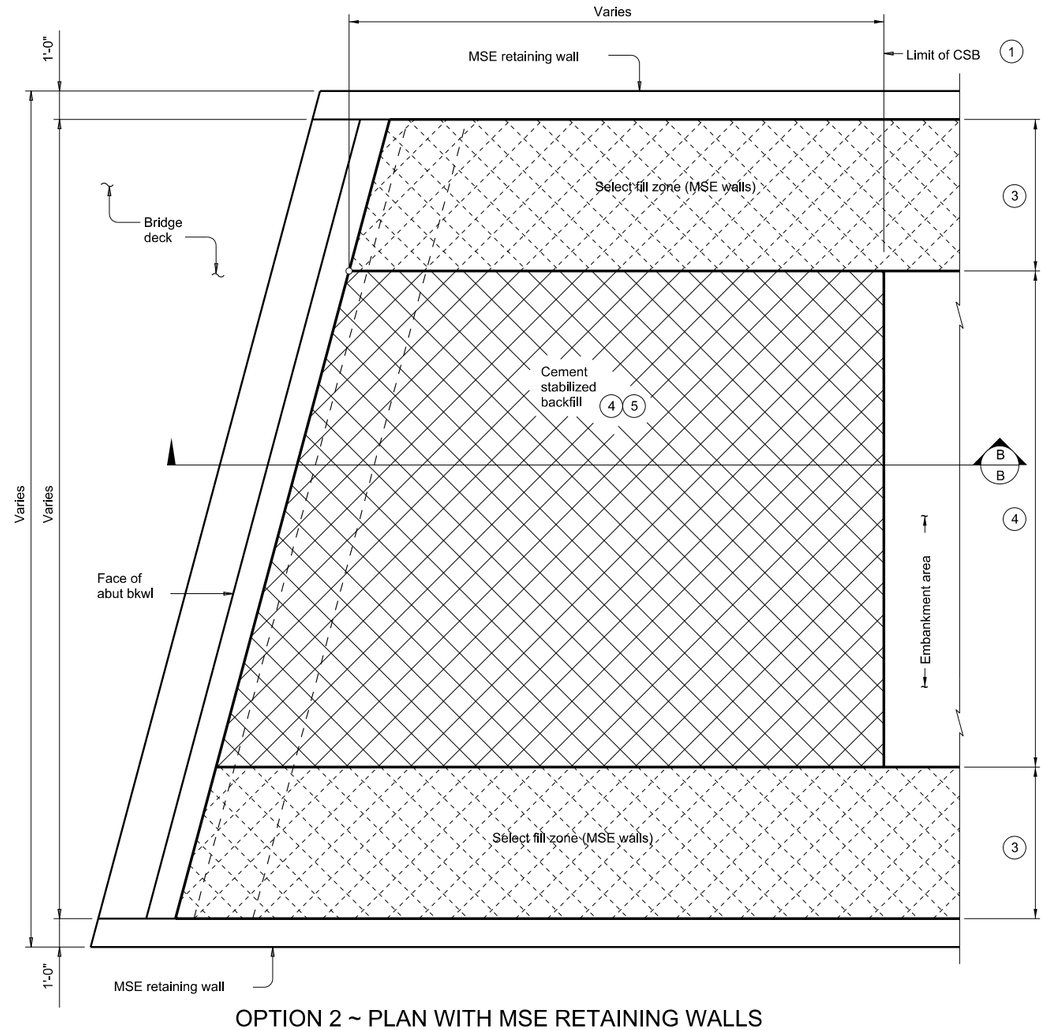

OPTION 2 ~ PLAN WITH MSE RETAINING WALLS

1. Usual limit of Cement Stabilized Backfill is at end of wingwall. Extend CSB limits as required to maintain a slope no steeper than 1:1 at bottom of backfill.
2. Bench backfill as shown with 12" (approximate) bench depths.
3. Where MSE retaining walls are present, adjust CSB limits to accommodate the select fill zone. See retaining wall details for additional information.
4. When distance between select fill zones is less than 5'-0", MSE select fill may be substituted for cement stabilized backfill with approval from the Engineer.
5. If shown in the plans flowable backfill can be used as a substitute for cement stabilized backfill with the following constraints:
   a). If flowable backfill is to be placed over MSE backfill then a filter fabric will be placed over the MSE backfill prior to placement of the flowable fill; and
   b). Place flowable fill in lifts not exceeding 2 feet in height, place each successive lift when the previous lift has stiffened/hardened (i.e. has lost its flowability).

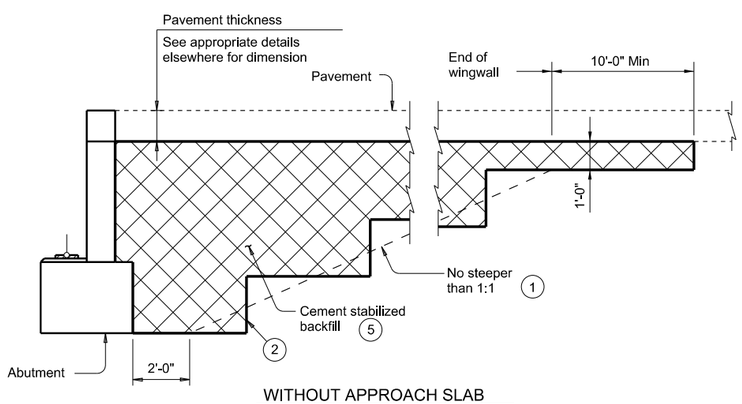

WITHOUT APPROACH SLAB

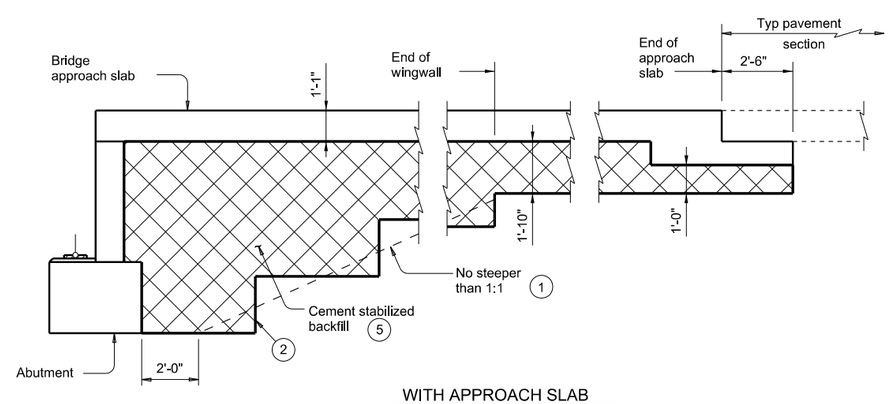

WITH APPROACH SLAB

(Showing BAS-C, BAS-A similar.)

SECTION B-B

DISCLAIMER:
The use of this standard is governed by the "Texas Engineering Practice Act". No warranty of any kind is made by TxDOT for any purpose whatsoever. TxDOT assumes no responsibility for the conversion of this standard to other formats or for incorrect results or damages resulting from its use.

DATE:
FILE:

SHEET 2 OF 2

Texas Department of Transportation — Bridge Division Standard

CEMENT STABILIZED ABUTMENT BACKFILL

BRIDGE ABUTMENT

CSAB

FILE: csabste1-20.dgn	DN: TxDOT	CK: TxDOT	DW: TxDOT	CK: TxDOT
©TxDOT April 2019	CONT	SECT	JOB	HIGHWAY
REVISIONS	0684	01	068	SH 550
02-20: Added Option 2.	DIST		COUNTY	SHEET NO.
	PHARR		CAMERON	236

Docusign Envelope ID: D24B0E46-A040-4DCF-9159-2076E4A3664D

STRUCTURE	DESIGNED GIRDERS									DEPRESSED STRAND PATTERN		CONCRETE		OPTIONAL DESIGN					LOAD RATING FACTORS		
	SPAN NO.	GIRDER NO.	GIRDER TYPE	PRESTRESSING STRANDS								RELEASE STRGTH (1)	MINIMUM 28 DAY COMP STRGTH	DESIGN LOAD COMP STRESS (TOP ℄) (SERVICE I)	DESIGN LOAD TENSILE STRESS (BOTT ℄) (SERVICE III)	REQUIRED MINIMUM ULTIMATE MOMENT CAPACITY (STRENGTH I)	LIVE LOAD DISTRIBUTION FACTOR (2)		STRENGTH I		SERVICE III
				NON-STD STRAND PATTERN	TOTAL NO.	SIZE (in)	STRGTH fpu (ksi)	"e" ℄ (in)	"e" END (in)	NO.	TO END (in)	f'ci (ksi)	f'c (ksi)	fct(ksi)	fcb(ksi)	(kip-ft)	Moment	Shear	Inv	Opr	Inv
NB & SB MAINLANE UPRR #2 OVERPASS	1	ALL	Tx40		24	0.6	270	14.77	9.43	4	36.5	4.000	5.000	2.740	-3.099	3833	0.615	1.030	1.08	1.66	1.11
	2	ALL	Tx40		24	0.6	270	14.77	9.43	4	36.5	4.000	5.000	2.772	-3.132	3870	0.614	1.031	1.04	1.64	1.08
	3	ALL	Tx40		34	0.6	270	14.07	8.78	6	36.5	5.400	6.200	3.926	-4.172	4869	0.507	0.896	1.18	1.60	1.07
	4	ALL	Tx40		24	0.6	270	14.77	10.43	4	30.5	4.200	5.000	2.772	-3.132	3870	0.614	1.031	1.05	1.63	1.10
	5	ALL	Tx40		24	0.6	270	14.77	9.43	4	36.5	4.000	5.000	2.740	-3.099	3833	0.615	1.030	1.06	1.65	1.11

NON-STANDARD STRAND PATTERNS

PATTERN	STRAND ARRANGEMENT AT ℄ OF GIRDER

(1) Based on the following allowable stresses (ksi):

Compression = 0.65 f'ci

Tension = $0.24\sqrt{f'ci}$

Optional designs must likewise conform.

(2) Portion of full HL93.

DESIGN NOTES:

Designed according to AASHTO LRFD Bridge Design Specifications.

Load rated using Load and Resistance Factor Rating according to AASHTO Manual for Bridge Evaluation.

Optional designs for girders 120 feet or longer must have a calculated residual camber equal to or greater than that of the designed girder.

Prestress losses for the designed girders have been calculated for a relative humidity of 60 percent. Optional designs must likewise conform.

FABRICATION NOTES:

Provide Class H concrete.

Provide Grade 60 reinforcing steel bars.

Use low relaxation strands, each pretensioned to 75 percent of fpu.

Strand debonding must comply with Item 424.4.2.2.2.4. Full-length debonded strands are only permitted in positions marked △. Double wrap full-length debonded strands in outer most position of each row.

When shown on this sheet, the Fabricator has the option of furnishing either the designed girder or an approved optional design. All optional design submittals must be signed, sealed and dated by a Professional Engineer registered in the State of Texas.

Seal cracks in girder ends exceeding 0.005" in width as directed by the Engineer. The fabricator is permitted to decrease the spacing of Bars R and S by providing additional bars to help limit crack width provided the decreased spacing results in no less than 1" clear between bars. The fabricator must take an approved corrective action if cracks greater than 0.005" form on a repetitive basis.

DEPRESSED STRAND DESIGNS:

Locate strands for the designed girder as low as possible on the 2" grid system unless a non-standard strand pattern is indicated. Fill row "2.5", then row "4.5", then row "6.5", etc., beginning each row in the "A" position and working outward until the required number of strands is reached. All strands in the "A" position must be depressed, maintaining the 2" spacing so that, at the girder ends, the upper two strands are in the position shown in the table.

To complete this sheet input the girder designs in the table and the relative humidity under Design Notes. In all cases, remove this block. This sheet must be signed, sealed, and dated by a registered Professional Engineer.

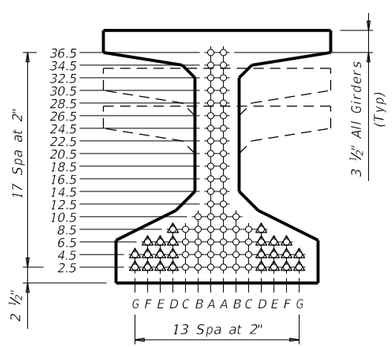

TYPE Tx28, Tx34 & Tx40

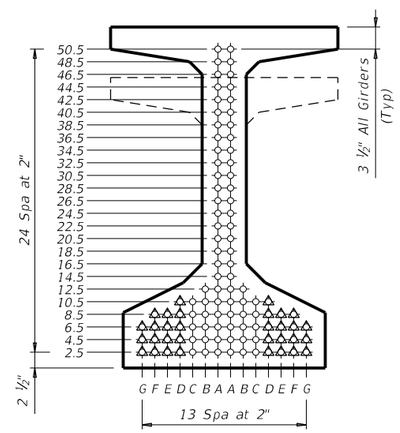

TYPE Tx46 & Tx54

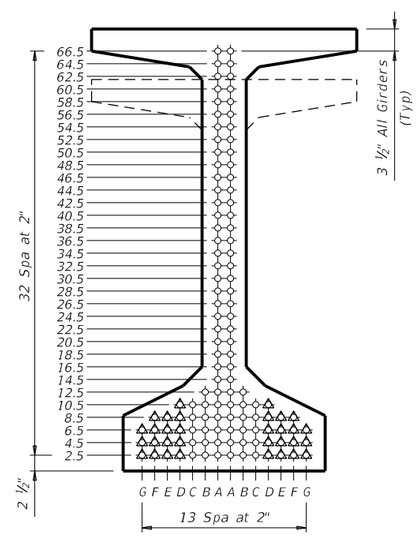

TYPE Tx62 & Tx70

STATE OF TEXAS
JORGE A. MADRIGAL
97243
LICENSED PROFESSIONAL ENGINEER
06/11/2024

HL93 LOADING

Texas Department of Transportation — Bridge Division Standard

PRESTRESSED CONCRETE I-GIRDER DESIGNS (NON-STANDARD SPANS)

IGND

FILE:	DN: TxDOT	CK: TxDOT	DW: EFC	CK: TAR
©TxDOT August 2017	CONT	SECT	JOB	HIGHWAY
REVISIONS	0684	01	068	SH 550
10-19: Modified for depressed strands only. 3-22: Added Load Rating.	DIST		COUNTY	SHEET NO.
	PHR		CAMERON	

DISCLAIMER:
The use of this standard is governed by the "Texas Engineering Practice Act". No warranty of any kind is made by TxDOT for any purpose whatsoever. TxDOT assumes no responsibility for the conversion of this standard to other formats or for incorrect results or damages resulting from its use.

DATE:
FILE:

Docusign Envelope ID: D24B0E46-A040-4DCF-9159-2076E4A3664D

DISCLAIMER:
The use of this standard is governed by the "Texas Engineering Practice Act". No warranty of any kind is made by TxDOT for any purpose whatsoever. TxDOT assumes no responsibility for the conversion of this standard to other formats or for incorrect results or damages resulting from its use.

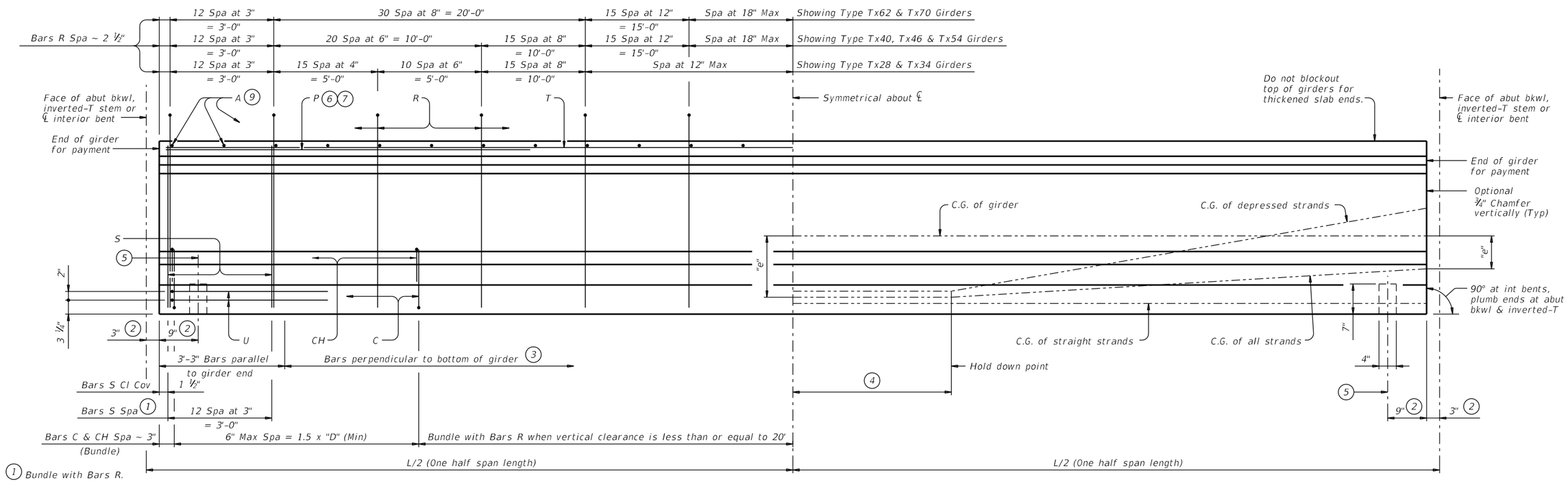

1. Bundle with Bars R.
2. Measured along ℄ Girder at interior bents; perpendicular to abutment bkwl or inverted-T stem.
3. The average of the top and bottom spacing of Bars R cannot exceed the required spacing.
4. L/20, but not less than 5'-0" (-0,+2').
5. ℄ 4" x 1 ½" Vertical Slotted Hole at doweled girder end [labeled (D) on Bridge Layout]. Required for outside girder only or as shown on substructure details. Anchorage holes may be tapered (4 ¾" x 1 ⅝") at base. If holes are formed with sheet metal, forms may be left in place.

GIRDER ELEVATION

6. Bars P (#6 x 15'-0") required in Tx62 and Tx70 girders. At the fabricator's option bars larger than #6 may be used. When L is less than 50 ft, Bars P are to be the same length as Bars T.
7. Bars P (#6 x 15'-0") are only required in Tx28, Tx34, Tx40, Tx46, and Tx54 girders when "e" at girder ends exceeds 0.25 x "D". At the fabricator's option bars larger than #6 may be used. When L is less than 50 ft, Bars P are to be the same length as Bars T.
8. 1 ⅜" Clear Cover to Bars S.
9. Space Bars A at 6" Max for girders requiring overhang bracket hangers. Space at 12" Max for all other girders. Tie to Bars R as necessary. See standard IGMS for "Deck Forming Notes".
10. Based on 155 pcf total weight of concrete and reinforcing steel.
11. Smooth trowel finish on the slab overhang side of exterior girder.

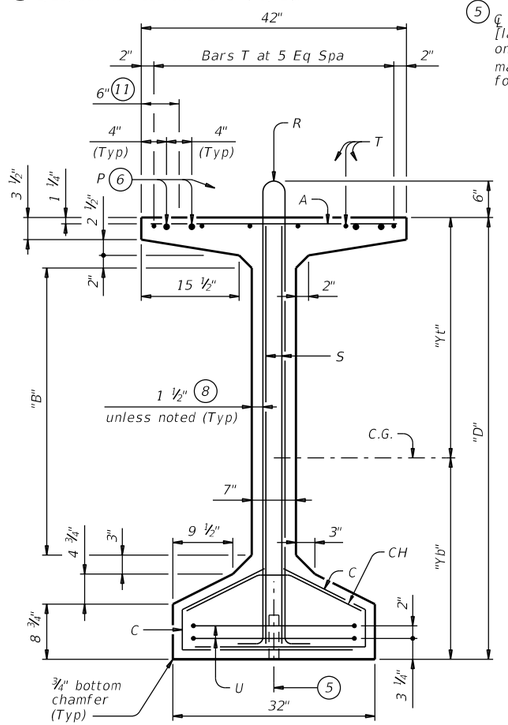

TYPE Tx62 & Tx70

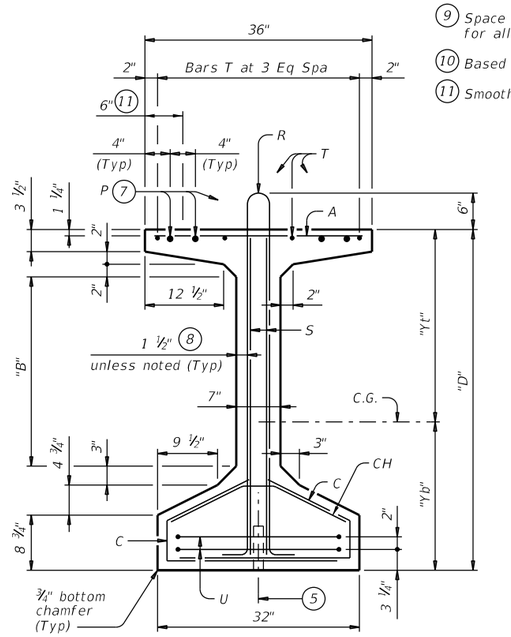

TYPE Tx46 & Tx54

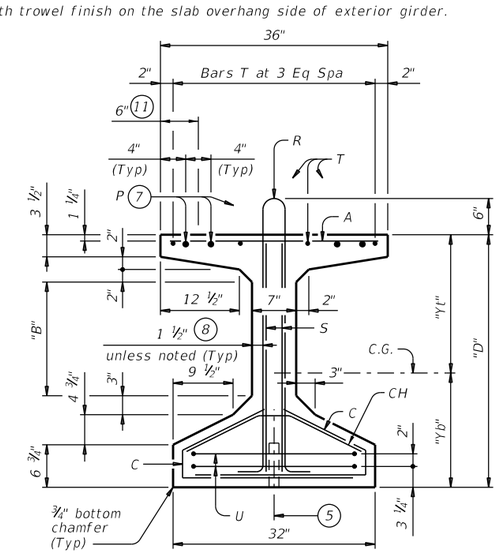

TYPE Tx28, Tx34 & Tx40

GIRDER DIMENSIONS AND SECTION PROPERTIES

Girder Type	"D" (in.)	"B" (in.)	"Yt" (in.)	"Yb" (in.)	Area (in.²)	"Ix" (in.⁴)	"Iy" (in.⁴)	Weight (10) (plf)
Tx28	28	6	15.02	12.98	585	52,772	40,559	630
Tx34	34	12	18.49	15.51	627	88,355	40,731	675
Tx40	40	18	21.90	18.10	669	134,990	40,902	720
Tx46	46	22	25.90	20.10	761	198,089	46,478	819
Tx54	54	30	30.49	23.51	817	299,740	46,707	880
Tx62	62	37 ½"	33.72	28.28	910	463,072	57,351	980
Tx70	70	45 ½"	38.09	31.91	966	628,747	57,579	1,040

GENERAL NOTES:

Designed according to AASHTO LRFD Bridge Design Specifications.
Provide Class H concrete.
Provide Grade 60 reinforcing steel.
An equal area of deformed Welded Wire Reinforcement (WWR) (ASTM A1064) may be substituted for Bars A, C, R or T unless otherwise noted.
It is permissible for bars or strands to come in contact with materials used in forming anchor holes.
When vertical clearance of the span is less than or equal to 20', provide additional Bars C and CH in every girder of that span.

Cover dimensions are clear dimensions, unless noted otherwise.
Reinforcing bar dimensions shown are out-to-out of bar.

HL93 LOADING — SHEET 1 OF 2

Texas Department of Transportation — Bridge Division Standard

PRESTRESSED CONCRETE I-GIRDER DETAILS

IGD

FILE:	DN: TxDOT	CK: JMH	DW: JTR	CK: TAR
©TxDOT August 2017	CONT	SECT	JOB	HIGHWAY
REVISIONS 10-19: Added Bars C and CH full length for VC<= 20' 3-23: Clarified C and CH requirement	0684	01	068	SH 550
	DIST	COUNTY		SHEET NO.
	PHARR	CAMERON		

DATE:
FILE:

Docusign Envelope ID: D24B0E46-A040-4DCF-9159-2076E4A3664D

DISCLAIMER:
The use of this standard is governed by the "Texas Engineering Practice Act". No warranty of any kind is made by TxDOT for any purpose whatsoever. TxDOT assumes no responsibility for the conversion of this standard to other formats or for incorrect results or damages resulting from its use.

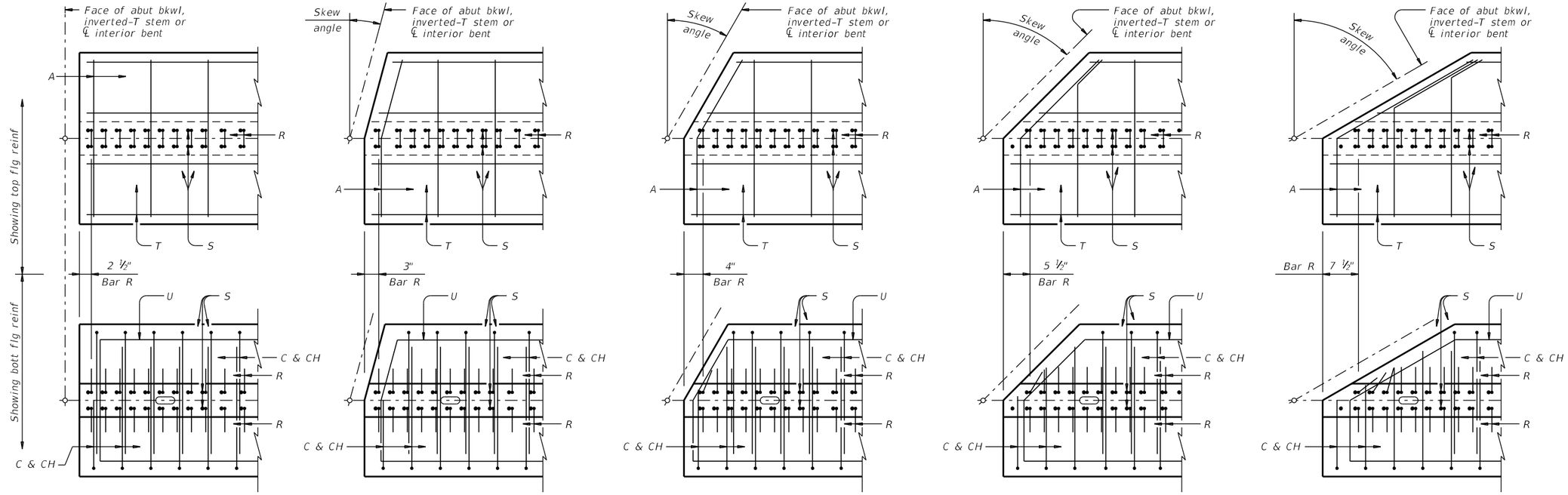

PLAN OF GIRDER ENDS (12)

To control top flange cracking that may occur during form removal, additional top flange reinforcing may be placed as shown in girder ends at the Fabricator's option.

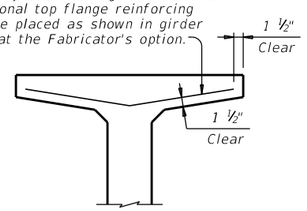

OPTIONAL TOP FLANGE REINFORCING DETAIL

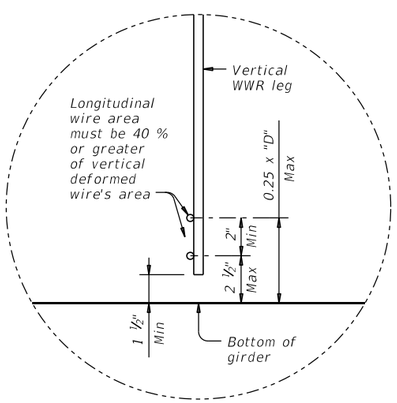

OPTIONAL WELDED WIRE REINFORCEMENT (WWR) DETAIL

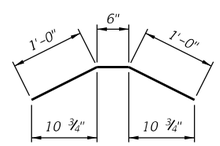

BARS CH (#4)

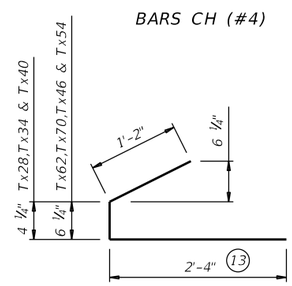

BARS C (#4)

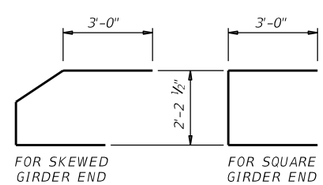

BARS U (#5)

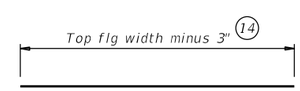

BARS A (#3)

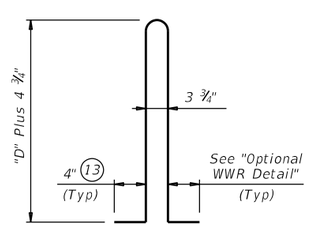

BARS R (#4) (16)

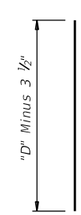

BARS S (#6)

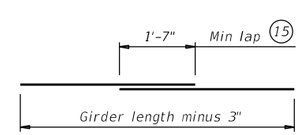

BARS T (#4)

(12) Reinforcing patterns shown are provided as guides to determine reinforcement placement in skewed ends. Place Bars S as close to girder end as cover requirements permit, which may prevent them to be bundled with Bars R.

(13) Bars may be cut or bent at skewed end as required.

(14) Increase as necessary for bars at skewed end.

(15) No portion of bar less than 10 ft.

(16) For Welded Wire Reinforcement (WWR) option, area of Bars R may be reduced in proportion to the increase in reinforcement yield strength over 60 ksi. Yield strength of WWR is limited to 75 ksi.

HL93 LOADING — SHEET 2 OF 2

Texas Department of Transportation — Bridge Division Standard

PRESTRESSED CONCRETE I-GIRDER DETAILS

IGD

FILE:	DN: TxDOT	CK: JMH	DW: JTR	CK: TAR
©TxDOT August 2017	CONT	SECT	JOB	HIGHWAY
REVISIONS 10-19: Added Bars C and CH full length for VC<= 20' 3-23: Clarified C and CH requirement	0684	01	068	SH 550
	DIST	COUNTY		SHEET NO.
	PHARR	CAMERON		

DATE:
FILE:

Docusign Envelope ID: D24B0E46-A040-4DCF-9159-2076E4A3664D

DISCLAIMER:
The use of this standard is governed by the "Texas Engineering Practice Act". No warranty of any kind is made by TxDOT for any purpose whatsoever. TxDOT assumes no responsibility for the conversion of this standard to other formats or for incorrect results or damages resulting from its use.

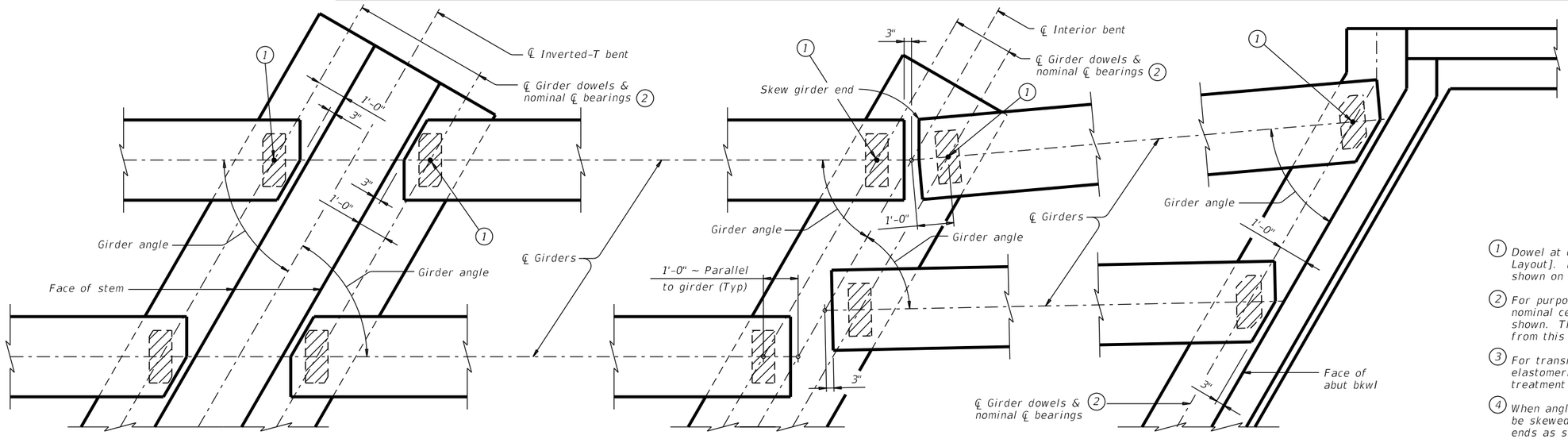

AT INVERTED-T BENT W/SKEW

AT CONVENTIONAL INTERIOR BENT W/SKEW

AT ABUTMENT W/SKEW (3)

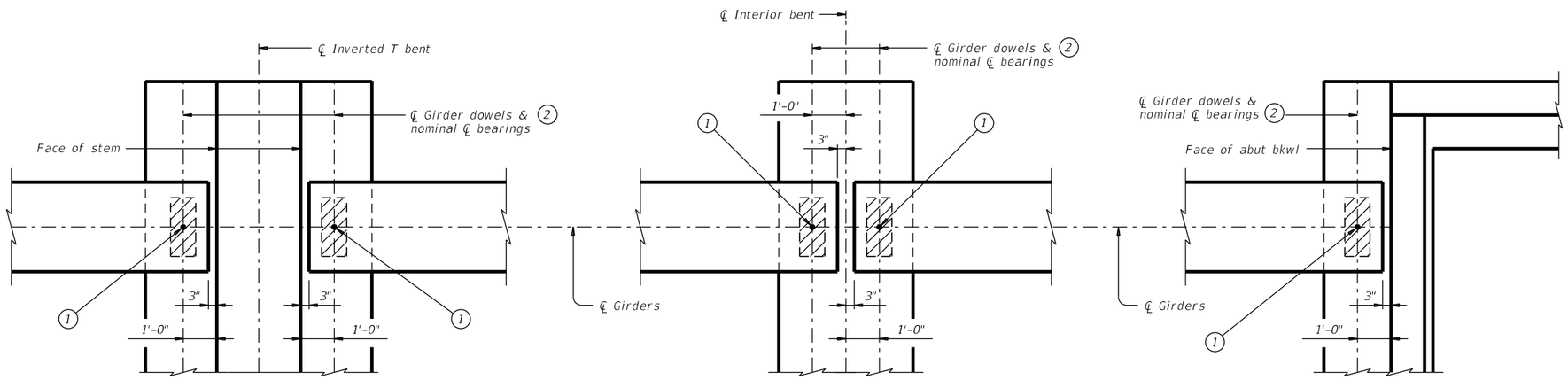

AT INVERTED-T BENT

AT CONVENTIONAL INTERIOR BENT

AT ABUTMENT (3)

GIRDER END DETAILS

(1) Dowel at doweled girder end [labeled (D) on Bridge Layout]. Required for outside girder only or as shown on substructure details.

(2) For purposes of computing bearing seat elevations, nominal centerline of bearing must be defined as shown. The actual center of bearing pad may vary from this line.

(3) For transition bents with backwall, girder and elastomeric bearings must receive the same treatment as shown for abutments.

(4) When angle exceeds 0°, one or both girders ends must be skewed to maintain the clearance between girder ends as shown in view.

(5) See Table of Bearing Pad Dimensions for bearing size. Girder end skew angles in Table not applicable for this situation. Table reflects girder conflicts of this type on radial bents only.

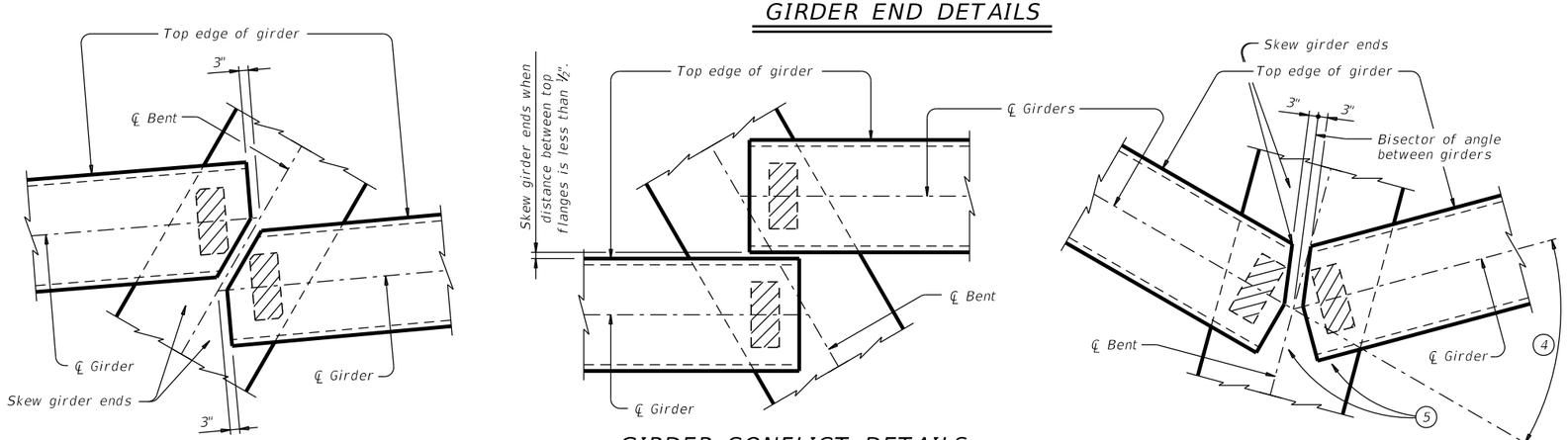

GIRDER CONFLICT DETAILS

GENERAL NOTES:

These details accommodate skew angles up to 60°.
Shop drawings for approval are required.
A bearing layout which identifies location and orientation of all bearings must be developed by the bearing fabricator. Permanently mark each bearing in accordance with the bearing layout. A copy of the bearing layout is to be provided to the Engineer.
Cost of furnishing and installing elastomeric bearings, including beveled and embedded steel plates, must be included in unit price bid for "Prestressed Concrete Girders".

HL93 LOADING

SHEET 1 OF 3

Texas Department of Transportation — Bridge Division Standard

ELASTOMERIC BEARING AND GIRDER END DETAILS
PRESTR CONCRETE I-GIRDERS

IGEB

FILE:	DN: AEE	CK: JMH	DW: JTR	CK: TxDOT
©TxDOT August 2017	CONT	SECT	JOB	HIGHWAY
REVISIONS	0684	01	068	SH 550
	DIST		COUNTY	SHEET NO.
	PHARR		CAMERON	

DATE:
FILE:

Docusign Envelope ID: D24B0E46-A040-4DCF-9159-2076E4A3664D

DISCLAIMER:
The use of this standard is governed by the "Texas Engineering Practice Act". No warranty of any kind is made by TxDOT for any purpose whatsoever. TxDOT assumes no responsibility for the conversion of this standard to other formats or for incorrect results or damages resulting from its use.

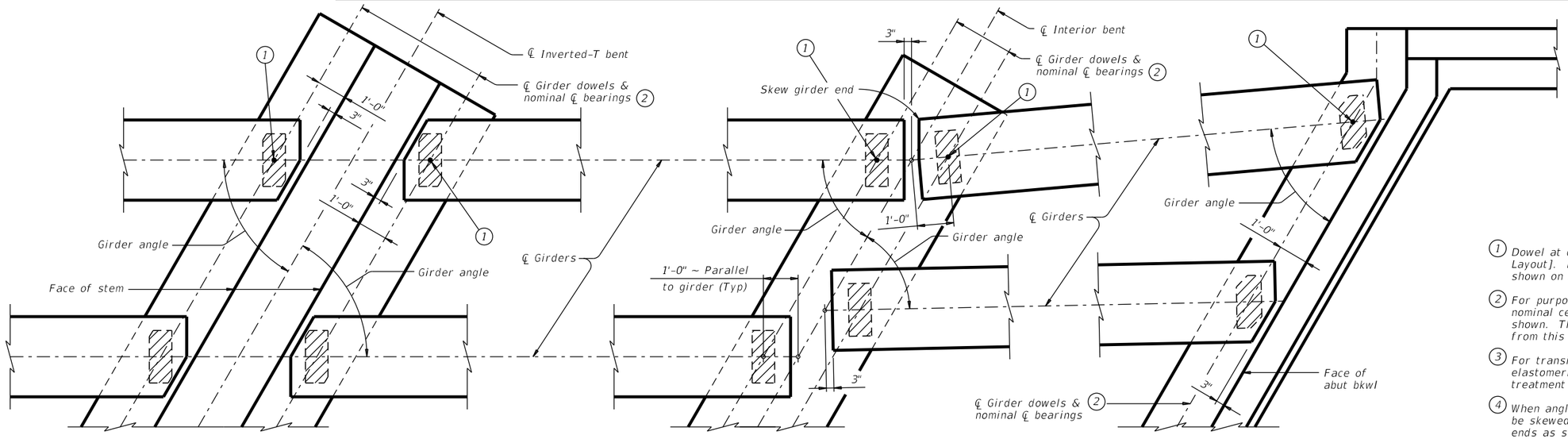

AT INVERTED-T BENT W/SKEW

AT CONVENTIONAL INTERIOR BENT W/SKEW

AT ABUTMENT W/SKEW (3)

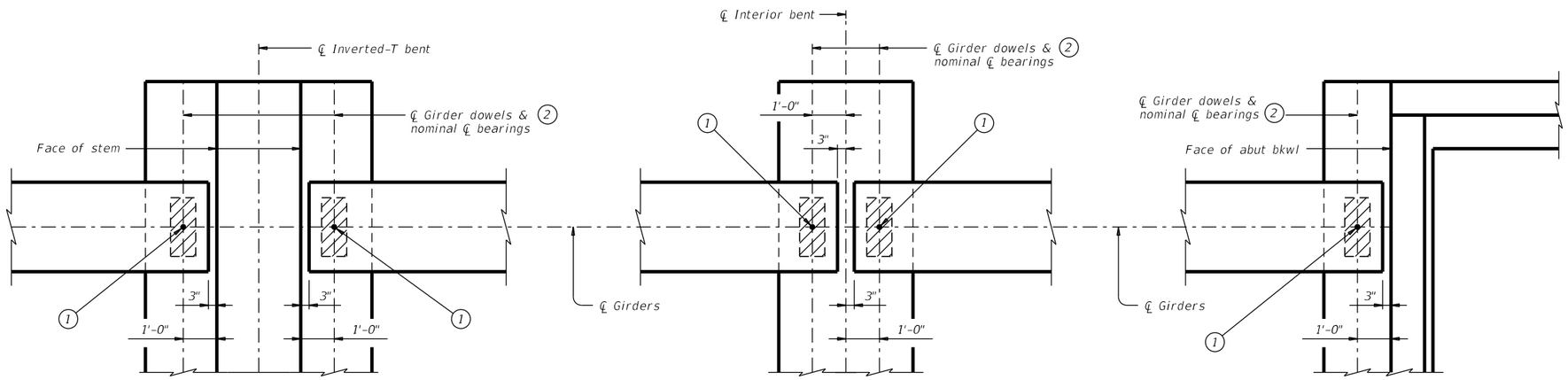

AT INVERTED-T BENT

AT CONVENTIONAL INTERIOR BENT

AT ABUTMENT (3)

GIRDER END DETAILS

(1) Dowel at doweled girder end [labeled (D) on Bridge Layout]. Required for outside girder only or as shown on substructure details.

(2) For purposes of computing bearing seat elevations, nominal centerline of bearing must be defined as shown. The actual center of bearing pad may vary from this line.

(3) For transition bents with backwall, girder and elastomeric bearings must receive the same treatment as shown for abutments.

(4) When angle exceeds 0°, one or both girders ends must be skewed to maintain the clearance between girder ends as shown in view.

(5) See Table of Bearing Pad Dimensions for bearing size. Girder end skew angles in Table not applicable for this situation. Table reflects girder conflicts of this type on radial bents only.

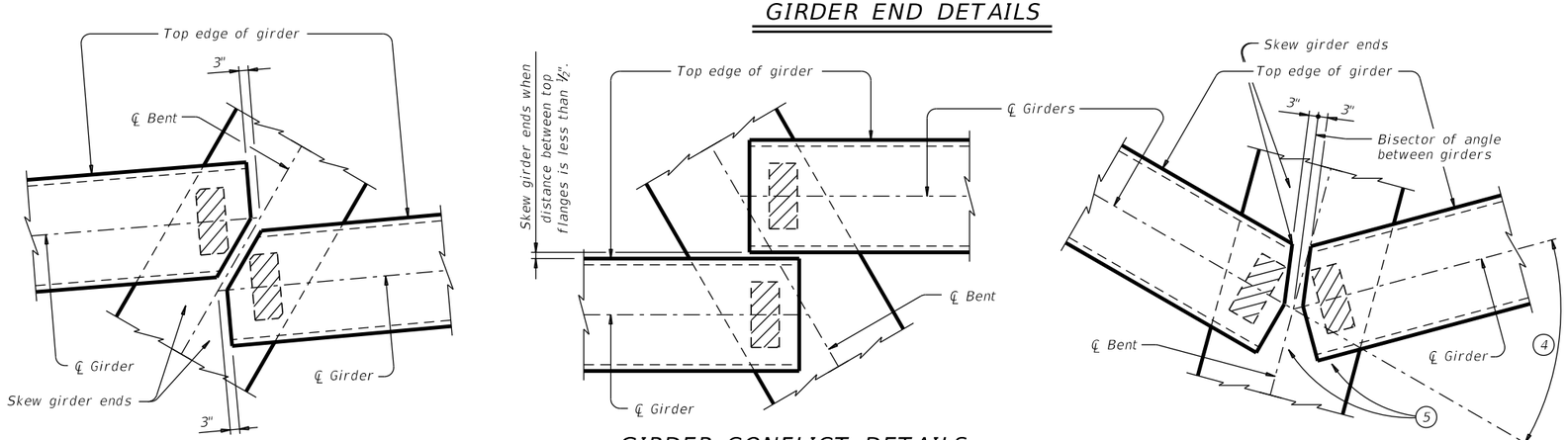

GIRDER CONFLICT DETAILS

GENERAL NOTES:

These details accommodate skew angles up to 60°.
Shop drawings for approval are required.
A bearing layout which identifies location and orientation of all bearings must be developed by the bearing fabricator. Permanently mark each bearing in accordance with the bearing layout. A copy of the bearing layout is to be provided to the Engineer.
Cost of furnishing and installing elastomeric bearings, including beveled and embedded steel plates, must be included in unit price bid for "Prestressed Concrete Girders".

HL93 LOADING

SHEET 1 OF 3

Texas Department of Transportation — Bridge Division Standard

ELASTOMERIC BEARING AND GIRDER END DETAILS
PRESTR CONCRETE I-GIRDERS

IGEB

FILE:	DN: AEE	CK: JMH	DW: JTR	CK: TxDOT
©TxDOT August 2017	CONT	SECT	JOB	HIGHWAY
REVISIONS	0684	01	068	SH 550
	DIST		COUNTY	SHEET NO.
	PHARR		CAMERON	

DATE:
FILE:

Docusign Envelope ID: D24B0E46-A040-4DCF-9159-2076E4A3664D

DISCLAIMER:
The use of this standard is governed by the "Texas Engineering Practice Act". No warranty of any kind is made by TxDOT for any purpose whatsoever. TxDOT assumes no responsibility for the conversion of this standard to other formats or for incorrect results or damages resulting from its use.

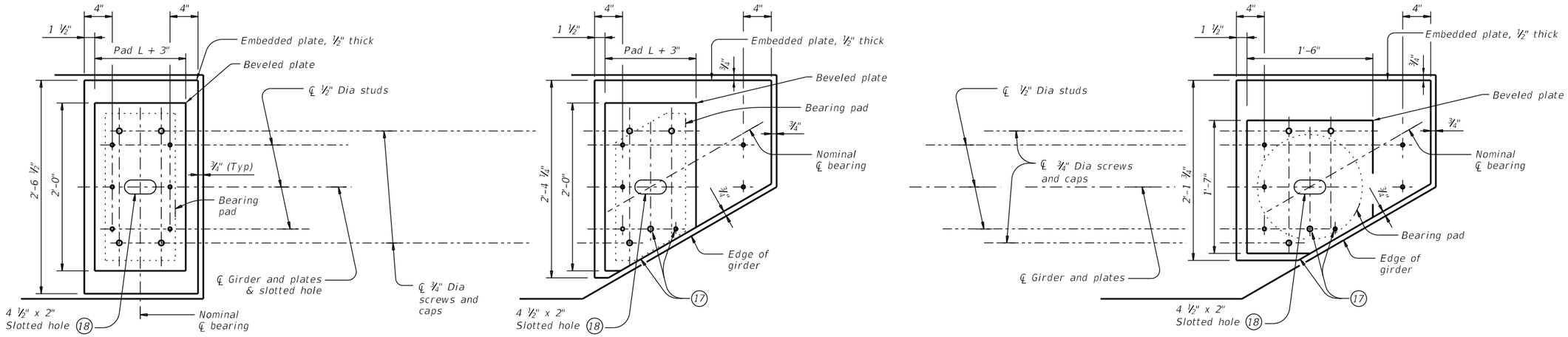

NORMAL GIRDER END
RECTANGULAR BEARING PAD

SKEWED GIRDER END
CLIPPED RECTANGULAR BEARING PAD

SKEWED GIRDER END
15" DIA BEARING PAD

PLAN VIEW OF SOLE PLATE DETAILS

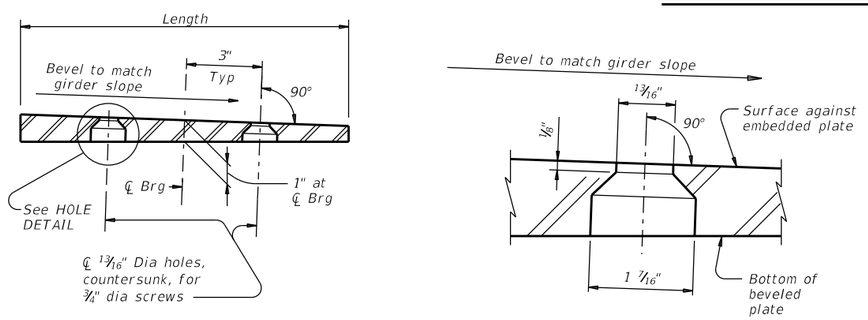

SECTION

HOLE DETAIL

BEVELED PLATE DETAILS

(17) Cut beveled and embedded plates to match girder end skew. Adjust location of screw and stud as shown when necessary.

(18) Slotted hole is required at doweled girder end locations.

SOLE PLATE NOTES:

Provide constant thickness elastomeric bearings with beveled and embedded steel sole plates in accordance with these details when the girder slope exceeds 5 percent or if otherwise required in the plans. Provide for all girders in the span.

On the shop drawings, dimension sole plates to the nearest 1/16" based on required thickness at centerline of bearing and slope of girder. Thickness tolerance variation from the approved shop drawings is 1/16"+/-, except variation from a plane parallel to the theoretical top surface can not exceed 1/16" total. Bearing surface tolerances listed in Item 424 apply to embedded and beveled plates.

Steel plate must conform to ASTM A36, A572 Gr 50, or A709 Gr 36 or Gr 50. Hot dip galvanize both the embedded plate and beveled sole plate after fabrication. Seal weld caps to embedded plate before galvanizing.

When determining if relocation of screw holes and studs are necessary for skewed girder ends, minimum clearance from screw or stud centerline to plate edge is 1.25".

Tap threads in the embedded plate only. Drill and tap prior to galvanizing.

¾" Dia screws must be electroplated, socket flat head countersunk cap screws conforming to ASTM F835. Electroplating must conform to ASTM B633, SC 2, Type I. Provide screws long enough to maintain a ¾" minimum embedment into the embedded plate and galvanized cap. Provide galvanized steel caps (16 ga Min) with a nominal 1" inside diameter and deep enough to accommodate the screws, but not less than ½" deep or deeper than 1".

Install beveled sole plates prior to shipping girders. Installed screw heads must not protrude below the bottom of the beveled plate.

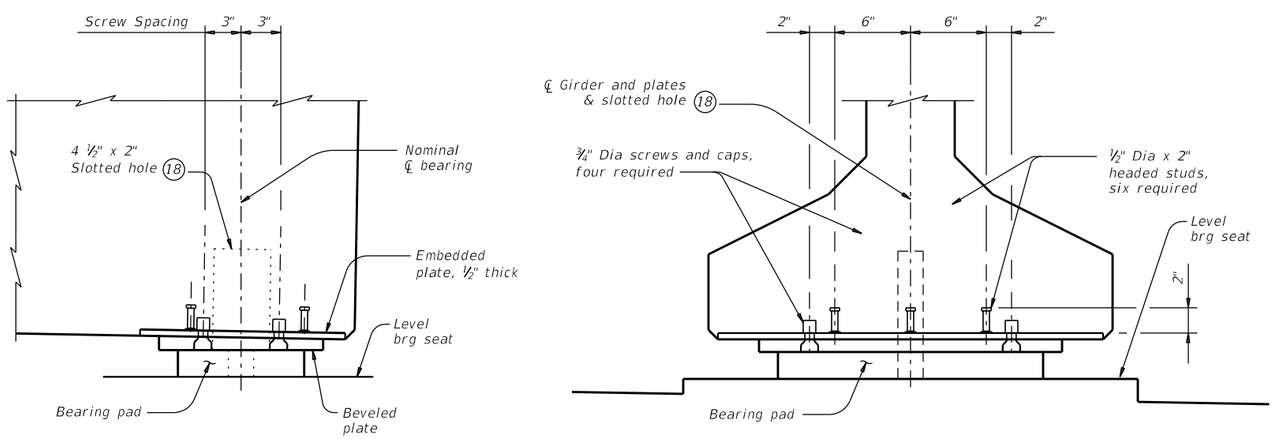

SIDE ELEVATION

END ELEVATION
Showing normal girder end.

GIRDER DETAILS

HL93 LOADING — SHEET 3 OF 3

Texas Department of Transportation — Bridge Division Standard

ELASTOMERIC BEARING AND GIRDER END DETAILS
PRESTR CONCRETE I-GIRDERS

IGEB

FILE:	DN: AEE	CK: JMH	DW: JTR	CK: TxDOT
©TxDOT August 2017	CONT	SECT	JOB	HIGHWAY
REVISIONS	0684	01	068	SH 550
	DIST		COUNTY	SHEET NO.
	PHARR		CAMERON	

DATE:
FILE:

Docusign Envelope ID: D24B0E46-A040-4DCF-9159-2076E4A3664D

DISCLAIMER:
The use of this standard is governed by the "Texas Engineering Practice Act". No warranty of any kind is made by TxDOT for any purpose whatsoever. TxDOT assumes no responsibility for the conversion of this standard to other formats or for incorrect results or damages resulting from its use.

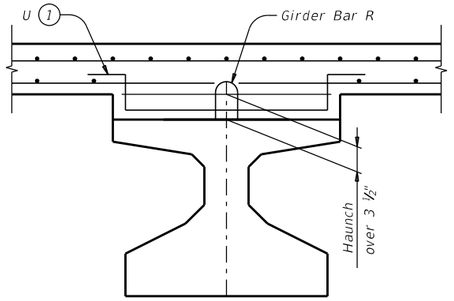

HAUNCH REINFORCING DETAIL

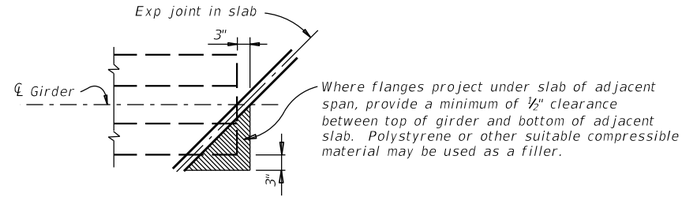

TREATMENT AT GIRDER END FOR SKEWED SPANS

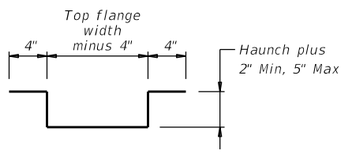

BARS U (#4)

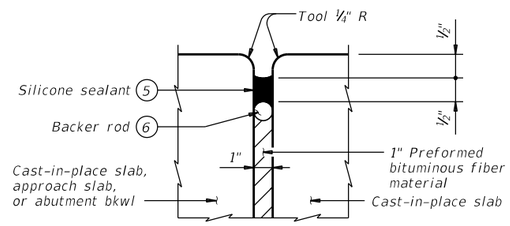

TYPE A JOINT DETAIL (7)

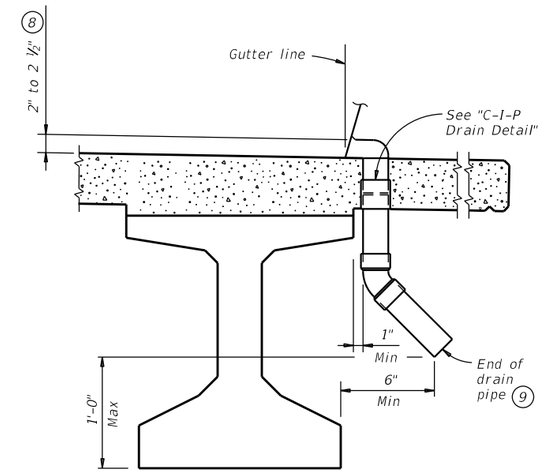

DRAIN DETAIL (10)

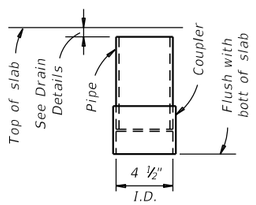

C-I-P DRAIN DETAIL (2)

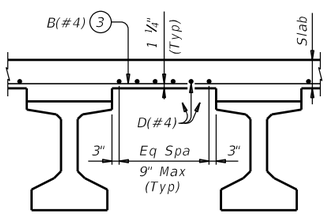

TYPICAL PART TRANSVERSE SLAB SECTION WITHOUT PCP (4)

Top reinforcing steel not shown for clarity.

(1) Space Bars U with girder Bars R in all areas where measured haunch exceeds 3 ½".

(2) Roughen outside of PVC with coarse rasp or equal to ensure bond with cast-in-place concrete.

(3) Bars B(#4) spaced at 9" Max with 2" end cover. Overhang option, Contractor's may end alternating bars B(#4) at centerline outside girder.

(4) Provide Grade 60 reinforcing steel. Provide bar laps, where required, as follows:
Uncoated ~ #4 = 1'-7"
Epoxy coated ~ #4 = 2'-5"

(5) Class 7 silicone sealant that conforms to DMS-6310. Install when ambient temperature is between 55°F and 85°F and rising. Engineer to determine allowable hours for sealant application.

(6) 1 ¼" backer rod must be compatible with joint sealant. Use of multiple pieces to create a backer rod cross section is not permitted. Top of backer rod must be convex as shown.

(7) The maximum distance between Type A expansion joints is 100'. See Bridge Layout for location of joints.

(8) Drain entrance formed in rail or sidewalk.

(9) Water may not be discharged onto girders.

(10) All drain pipe and fittings to be 4" diameter (Sch 40) PVC. See Item 481 "Pipe for Drains" for pipe, connections and solvent welding. Bend reinforcing steel to clear PVC 1". Drain length and location is as directed by the Engineer. Drains are not permitted over roadways or railways, or within 10'-0" of bent caps. Degrease outside of exposed PVC, apply acrylic water base primer, then coat with same surface finishing material as used for outside girder face. Variations of the above designs, as required for the type of rail used and its location on the structure, may be installed with the approval and direction of the Engineer.

GENERAL NOTES:
Designed according to AASHTO LRFD Bridge Design Specifications.
Payment for Type A joint will be as per Item 454, "Bridge Expansion Joints."
All other items (reinforcing steel, drains, etc.) shown on this sheet are subsidiary to other bid items.

Cover dimensions are clear dimensions, unless noted otherwise.
Reinforcing bar dimensions shown are out-to-out of bar.

DECK FORMWORK NOTES:
Overhang bracket hangers are limited to a safe working load of 3,600 lbs, applied to and along the axis of a coil rod at 45 degrees from vertical, regardless of higher loads permitted by hanger manufacturers. Do not place a hanger less than 12" from girder end. Space hangers accordingly.

SHEET 1 OF 2

Texas Department of Transportation — Bridge Division Standard

MISCELLANEOUS SLAB DETAILS
PRESTR CONCRETE I-GIRDERS

IGMS

FILE:	DN: TxDOT	CK: TxDOT	DW: JTR	CK: TxDOT
©TxDOT August 2017	CONT	SECT	JOB	HIGHWAY
REVISIONS	0684	01	068	SH 550
10-19: Modified Note 7. Type A now a pay item.	DIST		COUNTY	SHEET NO.
	PHARR		CAMERON	

DATE:
FILE:

Docusign Envelope ID: D24B0E46-A040-4DCF-9159-2076E4A3664D

DISCLAIMER:
The use of this standard is governed by the "Texas Engineering Practice Act". No warranty of any kind is made by TxDOT for any purpose whatsoever. TxDOT assumes no responsibility for the conversion of this standard to other formats or for incorrect results or damages resulting from its use.

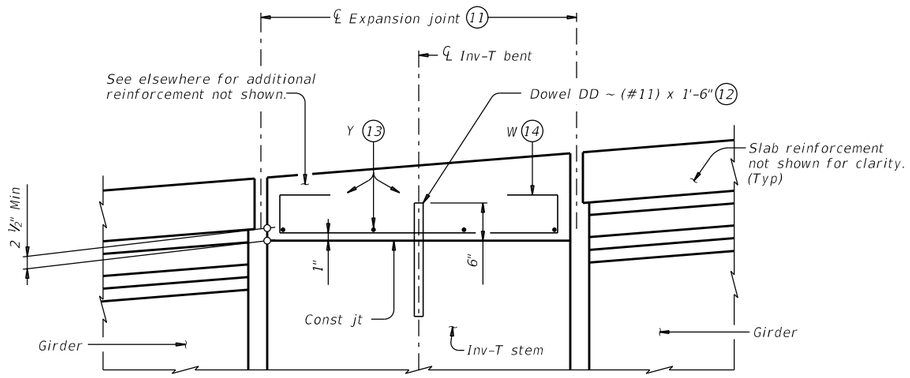

SHOWING EXPANSION JOINTS

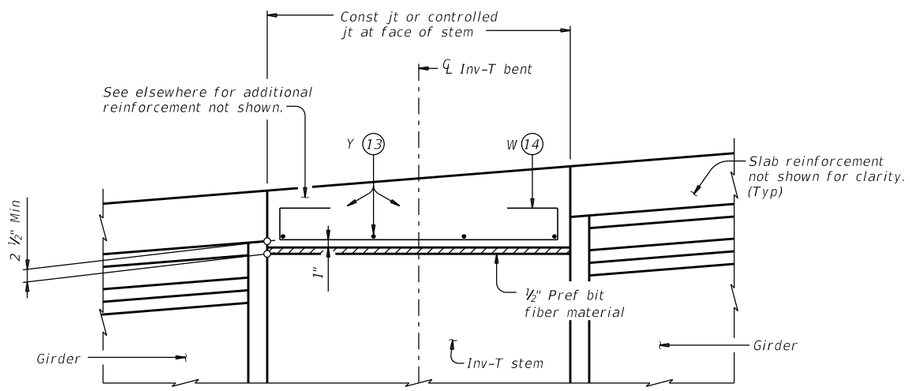

SHOWING CONST JTS OR CONTROLLED JTS

REINFORCEMENT OVER INV-T BENTS

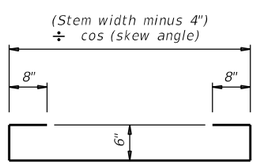

BARS W (#4)

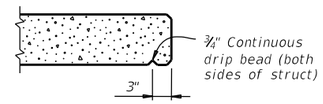

DRIP BEAD DETAIL

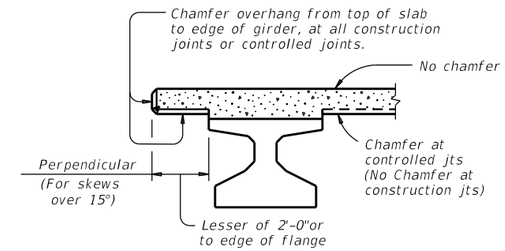

CHAMFER LIMITS DETAIL (15)

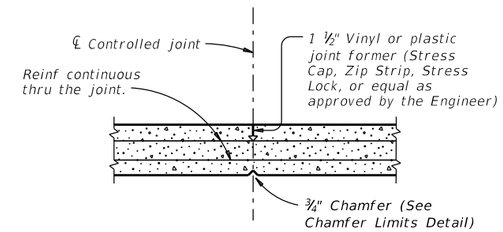

CONTROLLED JOINT DETAIL

(Saw-cutting is not allowed)

(11) See Layout for joint type.

(12) Dowels DD (#11) spaced at 5 Ft Max. See Inv-T bents for quantity and location.

(13) Space Bars Y (#4) at 12" Max. Use 2" end cover. Number of Bars Y must satisfy spacing limit. Place parallel to bent.

(14) Space Bars W at 12" Max (3" from end of cap). Tilt if necessary to maintain cover requirements. Place parallel to longitudinal slab reinforcement.

(15) See Span details for type of joint and joint locations.

SHEET 2 OF 2

Texas Department of Transportation — Bridge Division Standard

MISCELLANEOUS SLAB DETAILS

PRESTR CONCRETE I-GIRDERS

IGMS

FILE:	DN: TxDOT	CK: TxDOT	DW: JTR	CK: TxDOT
©TxDOT August 2017	CONT	SECT	JOB	HIGHWAY
REVISIONS	0684	01	068	SH 550
10-19: Modified Note 7. Type A now a pay item.	DIST		COUNTY	SHEET NO.
	PHARR		CAMERON	

DATE:
FILE:

Docusign Envelope ID: D24B0E46-A040-4DCF-9159-2076E4A3664D

DISCLAIMER:
The use of this standard is governed by the "Texas Engineering Practice Act". No warranty of any kind is made by TxDOT for any purpose whatsoever. TxDOT assumes no responsibility for the conversion of this standard to other formats or for incorrect results or damages resulting from its use.

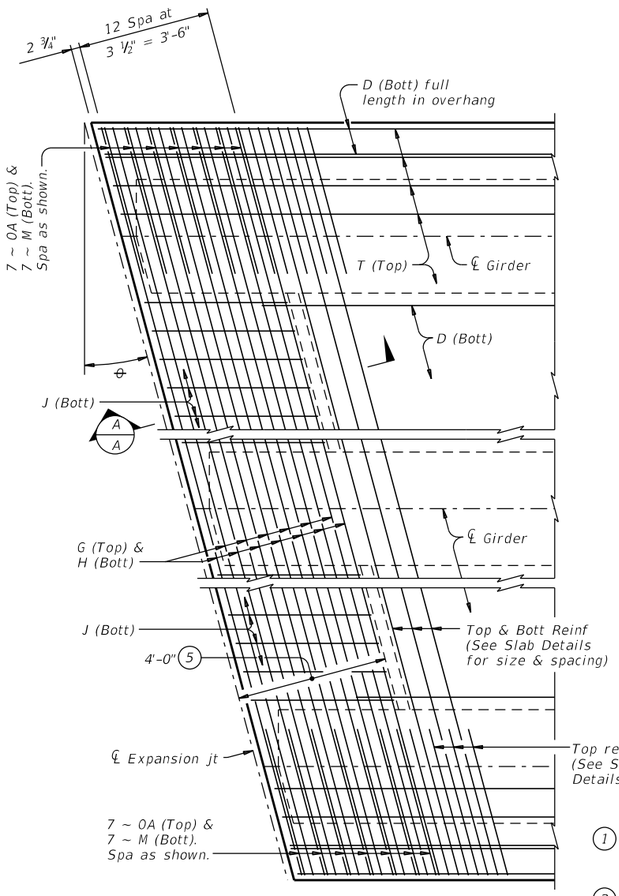

PARTIAL PLAN FOR SLABS WITHOUT BREAKBACK

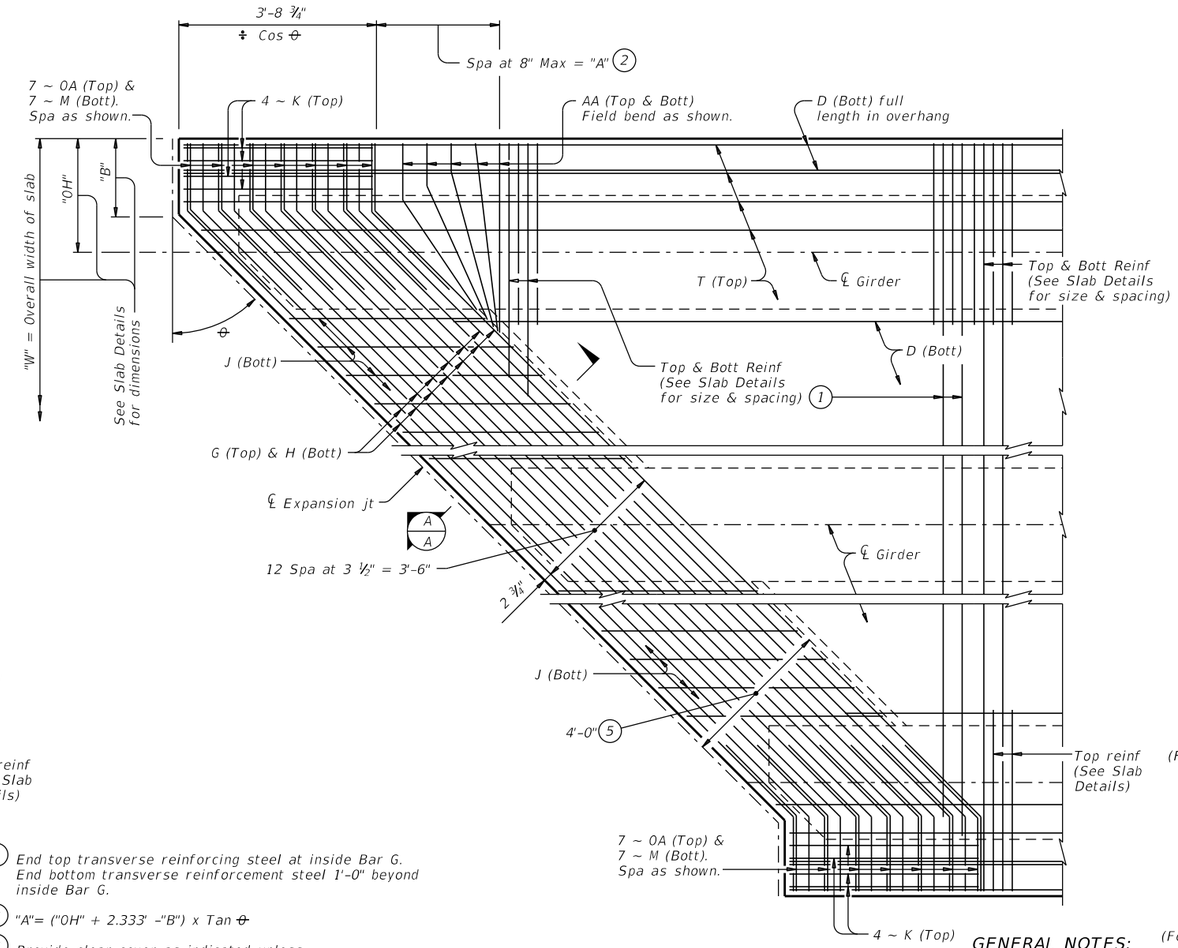

PARTIAL PLAN FOR SLABS WITH BREAKBACK

1. End top transverse reinforcing steel at inside Bar G. End bottom transverse reinforcement steel 1'-0" beyond inside Bar G.
2. "A"= ("OH" + 2.333' -"B") x Tan θ
3. Provide clear cover as indicated unless otherwise shown on Span Details.
4. Only required on slabs with breakbacks.
5. Thickened slab end dimensioned perpendicular to face of bkwl, centerline interior bent or face of inverted-T stem.

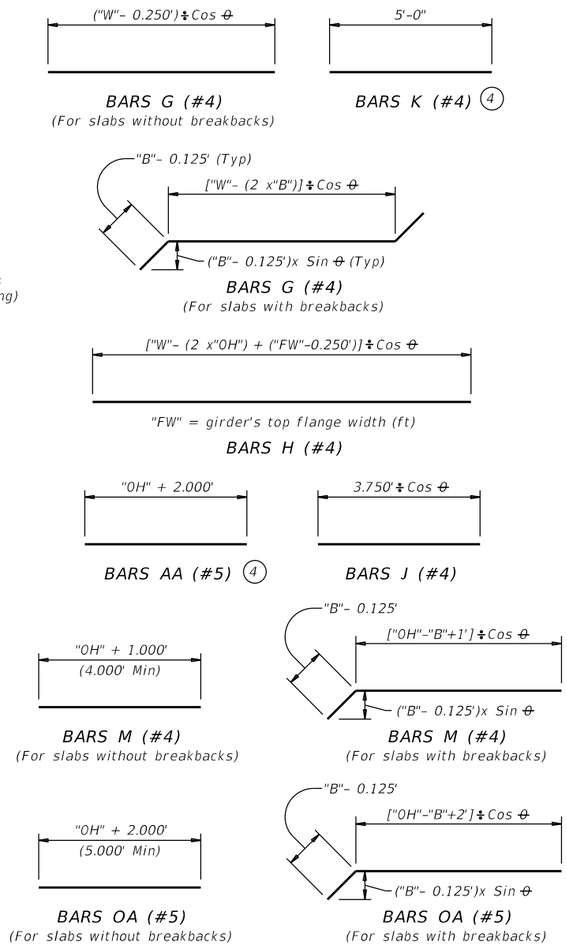

GENERAL NOTES:

Designed according to AASHTO LRFD Bridge Design Specifications.
These details are restricted to Prestressed Concrete I-Girder Spans.
These details are to be used in conjunction with the Span Details and PCP standard (if prestressed concrete panels are used).
When Option 2 from PCP standard is used, provide Bars AA, G, K and OA in the slab.

MATERIAL NOTES:

Provide Grade 60 reinforcing steel.
If slab reinforcing steel is shown on the Slab Details to be epoxy coated, then Bars AA, G, K, H, J, M and OA must be epoxy coated.
Provide bar laps, where required, as follows:
Uncoated ~ #4 = 1'-7"
Epoxy Coated ~ #4 = 2'-5"

Cover dimensions are clear dimensions, unless noted otherwise.
Reinforcing bar dimensions shown are out-to-out of bar.

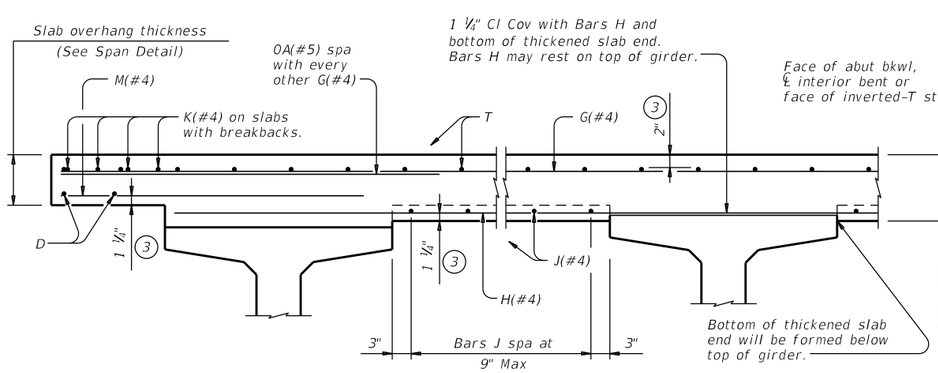

2" AND MORE OF HAUNCH

LESS THAN 2" OF HAUNCH

TYPICAL TRANSVERSE SECTION

(Showing Prestressed Conc I-Girders at ℄ Brg)

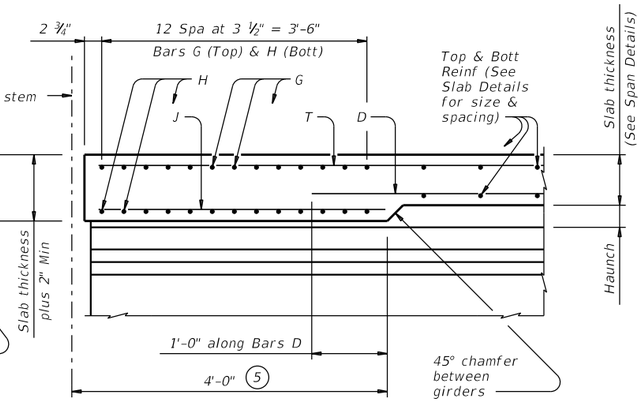

SECTION A-A

(Showing with 2" and more of haunch)

HL93 LOADING

Texas Department of Transportation — Bridge Division Standard

THICKENED SLAB END DETAILS

PRESTRESSED CONCRETE I-GIRDER SPANS

IGTS

FILE:	DN: TxDOT	CK: TxDOT	DW: JTR	CK: TxDOT
©TxDOT August 2017	CONT	SECT	JOB	HIGHWAY
REVISIONS	0684	01	068	SH 550
	DIST		COUNTY	SHEET NO.
	PHARR		CAMERON	

DATE:
FILE:

Docusign Envelope ID: D24B0E46-A040-4DCF-9159-2076E4A3664D

DISCLAIMER:
The use of this standard is governed by the "Texas Engineering Practice Act". No warranty of any kind is made by TxDOT for any purpose whatsoever. TxDOT assumes no responsibility for the conversion of this standard to other formats or for incorrect results or damages resulting from its use.

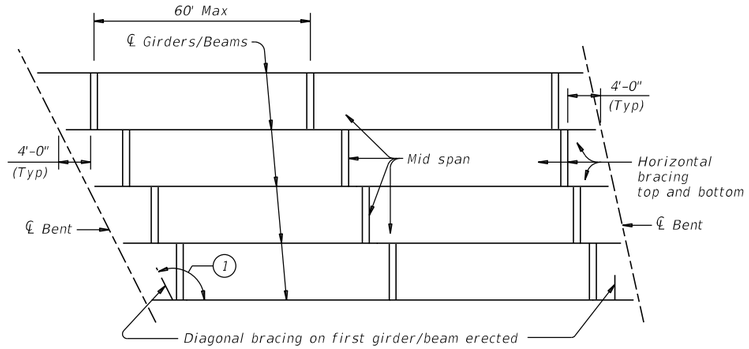

ERECTION BRACING

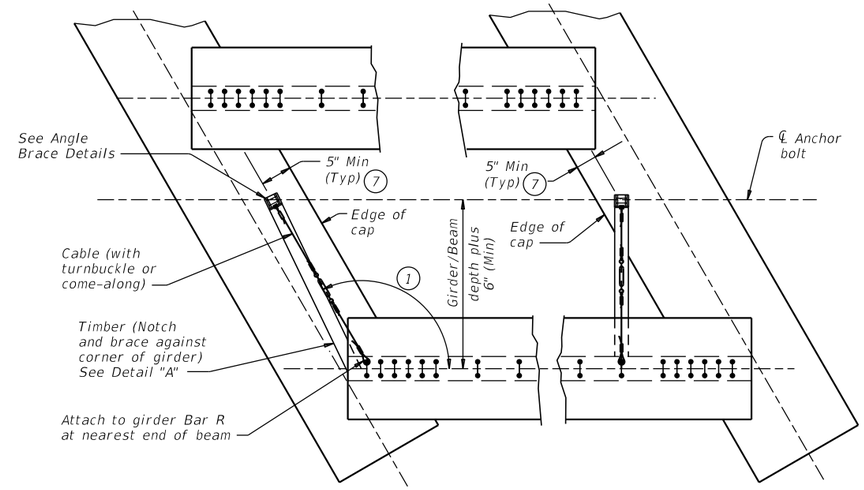

PLAN

HAULING & ERECTION:

The Contractor's attention is directed to the possible lateral instability of prestressed concrete girders and beams over 130' long, especially during hauling and erection. The use of the following methods to improve stability is encouraged: Locate lifting devices at the maximum practical distance from girder ends; use external lateral stiffening devices during hauling and erection; lift with vertical lines using two machines; and take care in handling to minimize inertial and impact forces.

ERECTION BRACING:

Erection bracing details shown are considered the minimum for fulfilling the bracing requirements of Item 425.

Required erection bracing must be placed immediately after erection of each girder and remain in place until additional bracing as required for slab placement is in place. This standard is needed in all cases to meet requirements for Slab Placement Bracing.

PHASED CONSTRUCTION:

Place erection and slab placement bracing for all girders in a phase as shown in these details. For phases after first, also place erection and slab placement bracing between outer girder of completed phase and adjacent girder of current phase. When the phase construction joint is between girders, top bracing can be omitted.

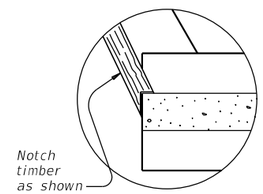

DETAIL "A"

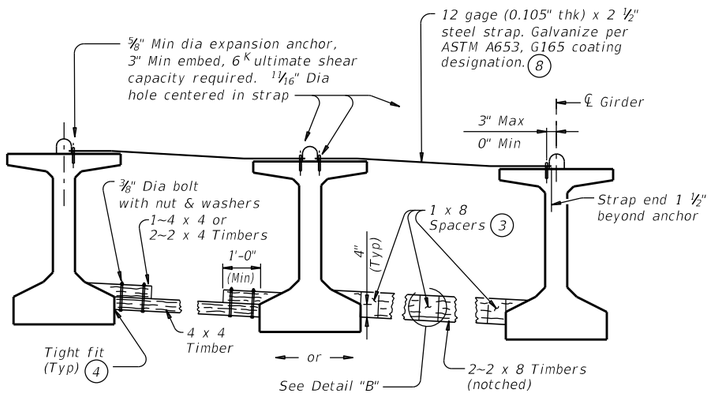

FOR ERECTION BRACING, OPTION 1

(This option is not allowed when slab is formed with PMDF or plywood.)

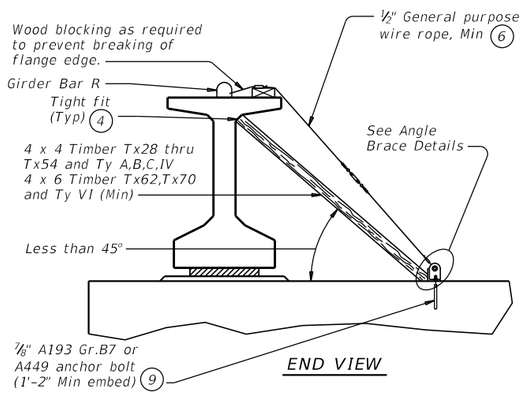

END VIEW

DIAGONAL BRACING DETAILS 5

(To be used on both ends of the first girder/beam erected in the span in each phase.)

1 If angle shown exceeds 120 degrees, move diagonal brace to other side of girder/beam and place square to girder/beam. This may prevent exterior girder from being erected first.

2 Place and weld #5 bars as shown during erection. If forming deck with prestressed panels, bars can be temporarily removed, one at a time, during panel erection. Re-install bar prior to additional panel erection. Bars can rest on panels and be bent down and welded to girder Bars R (See Sheet 2 of 2).

3 Clear distance between spacers must not exceed 3'. Nail together with 16d nails.

4 Use wedges as necessary to obtain tight fit. Nail wedges to timbers.

5 Pressure treated landscape timbers can not be used.

6 All hardware used with cable must be able to develop a minimum 25 kips breaking strength. Use thimbles at all loops in cable. Install cable clamps with saddles bearing against the live end and U-bolts bearing aginst the dead end.

7 It is acceptable to tie anchor bolts to cap reinforcement.

8 Prior to installing, field bend strap to lay flush on both girders' top flange and slope between flange tips.

9 Anchor bolt may be drilled and epoxied in place. Provide 25k minimum pullout. Core drill hole.

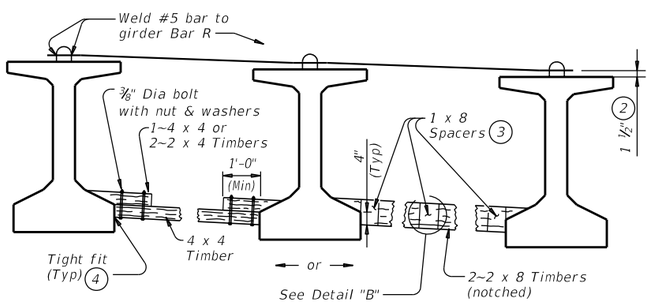

FOR ERECTION BRACING, OPTION 2

HORIZONTAL BRACING DETAILS 5

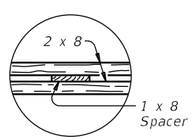

PLAN

DETAIL "B"

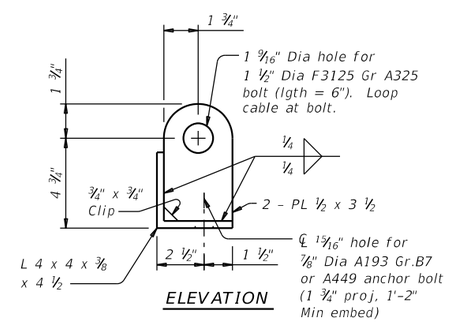

ELEVATION

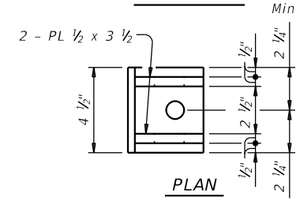

PLAN

ANGLE BRACE DETAILS

SHEET 1 OF 2

Texas Department of Transportation — Bridge Division Standard

MINIMUM ERECTION AND BRACING REQUIREMENTS

PRESTRESSED CONCRETE I-GIRDERS AND I-BEAMS

MEBR(C)

FILE:	DN: TxDOT	CK: TxDOT	DW: TxDOT	CK: TxDOT
©TxDOT August 2017	CONT	SECT	JOB	HIGHWAY
REVISIONS	0684	01	068	SH 550
	DIST		COUNTY	SHEET NO.
	PHARR		CAMERON	

DATE:
FILE:

Docusign Envelope ID: D24B0E46-A040-4DCF-9159-2076E4A3664D

DISCLAIMER:
The use of this standard is governed by the "Texas Engineering Practice Act". No warranty of any kind is made by TxDOT for any purpose whatsoever. TxDOT assumes no responsibility for the conversion of this standard to other formats or for incorrect results or damages resulting from its use.

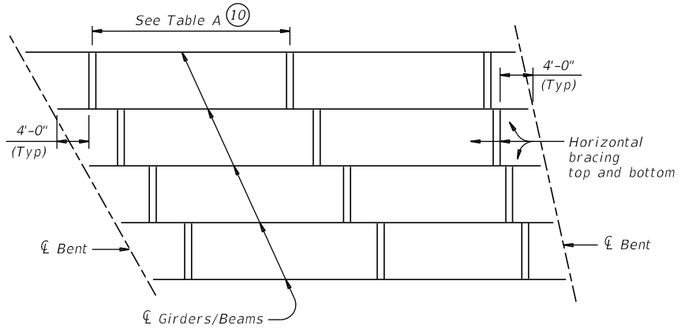

SLAB PLACEMENT BRACING

TABLE A

OPTION 1-RIGID BRACING (STEEL STRAP)

Girder or Beam Type	Maximum Bracing Spacing	
	Slab Overhang less than 4'-0" (11)	Slab Overhang 4'-0" and greater (11)
Tx28	¼ points	¼ points
Tx34	¼ points	¼ points
Tx40	¼ points	⅛ points
Tx46	¼ points	⅛ points
Tx54	¼ points	⅛ points
Tx62	¼ points	⅛ points
Tx70	¼ points	⅛ points
A	⅛ points	⅛ points
B	⅛ points	⅛ points
C	⅛ points	⅛ points
IV	¼ points	⅛ points
VI	¼ points	⅛ points

OPTION 2-FLEXIBLE BRACING (NO. 5 OVER PCP)

Girder or Beam Type	Maximum Bracing Spacing	
	Slab Overhang less than 4'-0" (11)	Slab Overhang 4'-0" and greater (11)
Tx28	¼ points	⅛ points
Tx34	¼ points	⅛ points
Tx40	¼ points	⅛ points
Tx46	¼ points	⅛ points
Tx54	¼ points	⅛ points
Tx62	¼ points	⅛ points
Tx70	¼ points	⅛ points
A	2.0 ft	1.5 ft
B	3.0 ft	2.0 ft
C	4.5 ft	2.0 ft
IV	¼ points	4.0 ft
VI	¼ points	4.0 ft

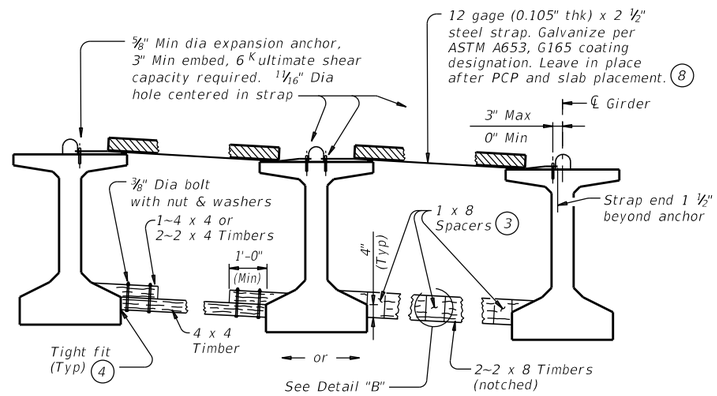

FOR SLAB PLACEMENT BRACING, OPTION 1 - RIGID

(Showing slab formed with PCP. This option is not allowed when slab is formed with PMDF or plywood.)

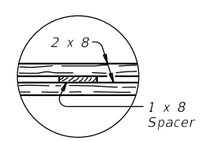

PLAN

DETAIL "B"

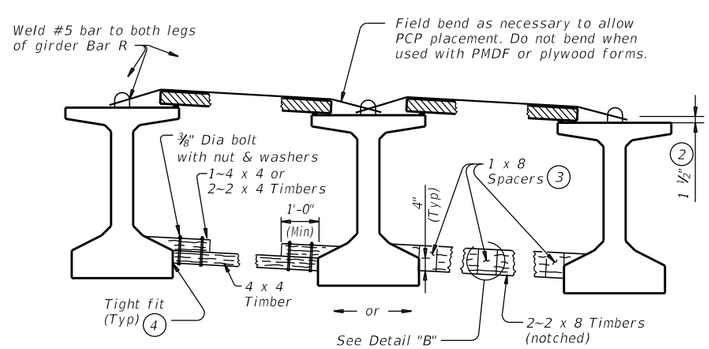

FOR SLAB PLACEMENT BRACING, OPTION 2 - FLEXIBLE

(Showing slab formed with PCP.)

HORIZONTAL BRACING DETAILS (5)

(2) Place and weld #5 bars as shown during erection. If forming deck with prestressed panels, bars can be temporarily removed, one at a time, during panel erection. Re-install bar prior to additional panel erection. Bars can rest on panels and be bent down and welded to girder Bars R.

(3) Clear distance between spacers must not exceed 3'. Nail together with 16d nails.

(4) Use wedges as necessary to obtain tight fit. Nail wedges to timbers.

(5) Pressure treated landscape timbers can not be used.

(8) Prior to installing, field bend strap to lay flush on both girders' top flange and slope between flange tips.

(10) Bracing spacing (¼ and ⅛ points) measured between first and last typical brace location.

(11) Measure slab overhang from centerline of girder or beam. When overhang varies in span, determine bracing spacing based on largest overhang.

SLAB PLACEMENT BRACING:

The details for slab placement bracing are considered minimum for fulfilling the requirements of Specification Items 422 and 425.

Required slab placement bracing must remain in place until slab concrete has attained a compressive strength of 3000 psi.

GENERAL NOTES:

Bracing details for spans longer than 150' are not provided. The Contractor must submit proposed bracing details for such conditions to the Engineer for approval prior to erection.

Systems equal to or better than those shown may be used provided details of such systems are submitted to and approved by the Engineer prior to erection.

Use of these systems or details does not relieve the Contractor of the responsibility for the adequacy of the bracing and the safety of the structure.

Removal of bracing for short periods of time to align girders and beams is permissible.

All turn-buckles, come-alongs, anchors and other connections must be capable of developing the full strength of the cable shown.

Furnish anchor bolts and nuts in accordance with Item 449, "Anchor Bolts".

Texas Department of Transportation — Bridge Division Standard

MINIMUM ERECTION AND BRACING REQUIREMENTS

PRESTRESSED CONCRETE I-GIRDERS AND I-BEAMS

MEBR(C)

FILE:	DN: TxDOT	CK: TxDOT	DW: TxDOT	CK: TxDOT
©TxDOT August 2017	CONT	SECT	JOB	HIGHWAY
REVISIONS	0684	01	068	SH 550
	DIST		COUNTY	SHEET NO.
	PHARR		CAMERON	

DATE:
FILE:

Docusign Envelope ID: D24B0E46-A040-4DCF-9159-2076E4A3664D

DISCLAIMER:
The use of this standard is governed by the "Texas Engineering Practice Act". No warranty of any kind is made by TxDOT for any purpose whatsoever. TxDOT assumes no responsibility for the conversion of this standard to other formats or for incorrect results or damages resulting from its use.

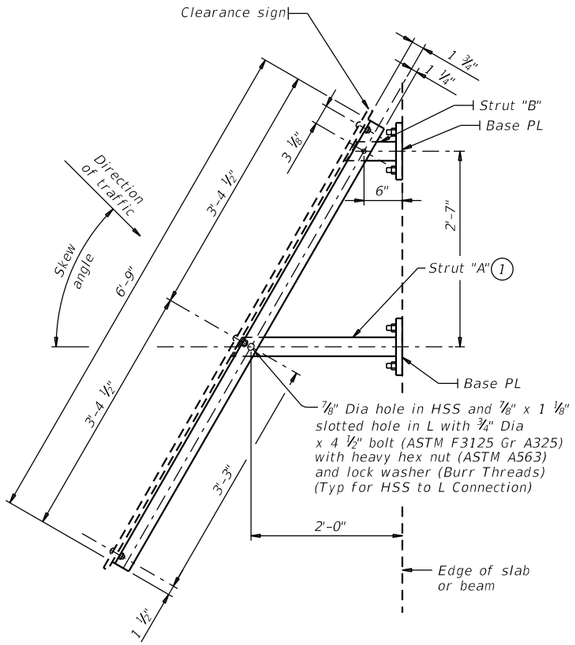

PLAN OF TYPE S MOUNT

(Used for skews over 30°)

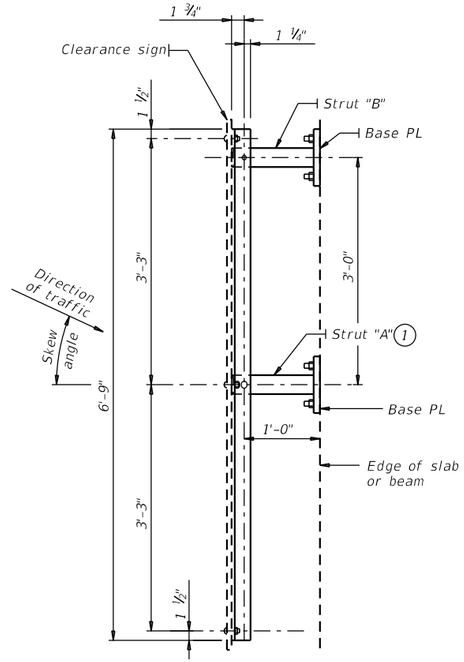

PLAN OF TYPE N MOUNT

(Used for 0° to 30° skews)

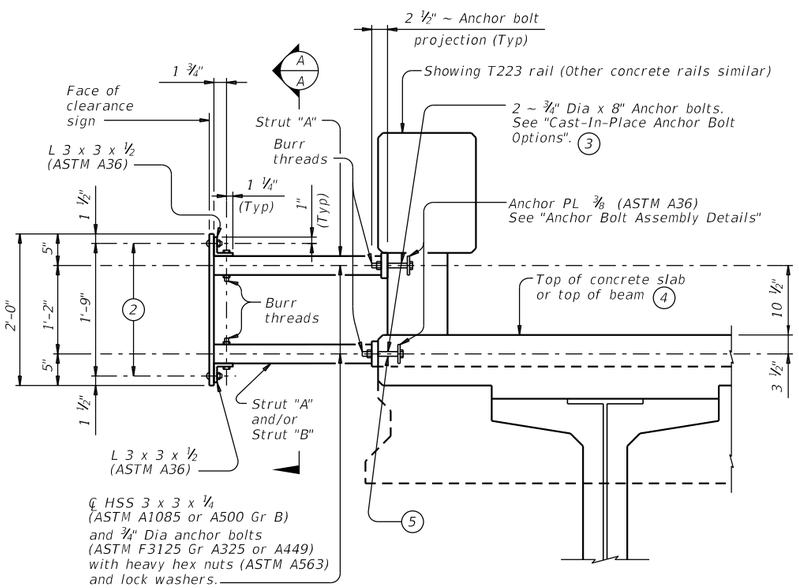

SECTION

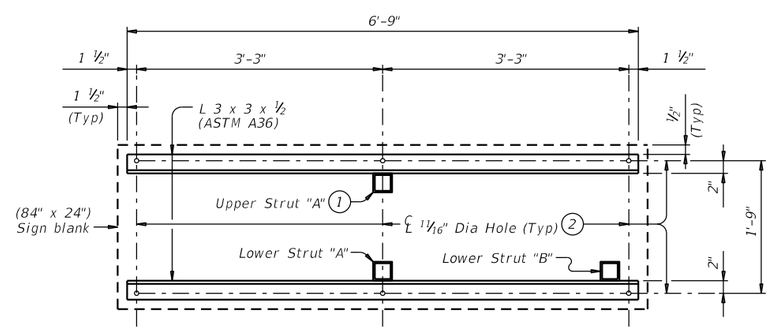

SECTION A-A

1. Locate centerline of Strut A no closer than 12" from a vertical concrete edge.
2. ℄ ⅝" Dia x 2" Hexagon socket button head cap screws (ASTM A574) with hex nuts. Attach hex nuts to L 3 x 3 x ½ by tack welding in two places. Threads must have Class 3A fit tolerance in accordance ASME B1.1. Six screws required.
3. At the Contractor's option fully threaded adhesive anchors may be use instead of cast-in-place anchor bolts. Expansion anchors are not allowed. Provide adhesive anchors that are ¾" Dia ASTM A193 Gr B7 or F1554 Gr 105 fully threaded rods with one hardened steel washer (ASTM F436) and one regular lock washer placed under heavy hex nut (ASTM A563). Embed fully threaded rods using a Type III, Class C, D, E, or F anchor adhesive. Adhesive anchor embedment depth is 8". Anchor adhesive chosen must be able to achieve a factored bond strength in tension of 2.2 kips per anchor (edge distance and spacing must be accounted for). Submit signed and sealed calculations or the manufacturer's published literature showing the proposed anchor adhesive's ability to develop this load to the Engineer for approval prior to use. Anchor installation, including hole size, drilling, and clean out, must be in accordance with Item 450, "Railing".
4. For decked slab beams topped with a 2 course surface treatment and ACP overlay.
5. Anchor bolts to be cast into decked slab beams topped with a 2 course surface treatment or ACP overlay. Anchor bolts with heavy hex nuts, regular lock washers, hardened washers and anchor plate that is embedded in the beam will be provided by the beam Fabricator.

CONSTRUCTION NOTES:

Install the vertical face of clearance sign plumb unless otherwise approved by the Engineer.

Test adhesive anchors in accordance with Item 450.3.3, "Tests". Test 1 anchor per bridge mounted clearance sign installed. Perform corrective measures to provide adequate capacity if any of the tests do not meet the required test load. Repair damage from testing as directed.

MATERIAL NOTES:

Galvanize all steel components after fabrication unless otherwise noted.

GENERAL NOTES:

This standard provides details to mount a vertical clearance sign (84" x 24") to bridges. Rail Types T631, T631LS, PR11, PR22 and PR3 are not accommodated.

The Engineer will furnish the clearance to be shown on the sign.

See Bridge Layout for sign location and mounting type (Type N or S).

Cost of furnishing, installing, relocating or removing a clearance sign, including structural steel for sign mount, is included in unit price bid for Item 644, "Small Roadside Sign Assemblies".

One Sign Blank (84" x 24") is 14 SF.

Average steel weight for one complete Type N Mount is 219 Lb.

Average steel weight for one complete Type S Mount is 233 Lb.

SHEET 1 OF 3

Texas Department of Transportation — Bridge Division Standard

BRIDGE MOUNTED CLEARANCE SIGN ASSEMBLY

BMCS

FILE:	DN: TxDOT	CK: TxDOT	DW: TxDOT	CK: TxDOT
©TxDOT April 2019	CONT	SECT	JOB	HIGHWAY
REVISIONS	0684	01	068	SH 550
	DIST		COUNTY	SHEET NO.
	PHARR		CAMERON	

DATE:
FILE:

Docusign Envelope ID: D24B0E46-A040-4DCF-9159-2076E4A3664D

DISCLAIMER:
The use of this standard is governed by the "Texas Engineering Practice Act". No warranty of any kind is made by TxDOT for any purpose whatsoever. TxDOT assumes no responsibility for the conversion of this standard to other formats or for incorrect results or damages resulting from its use.

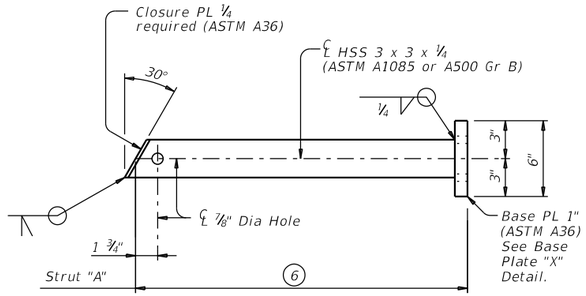

FOR T411 AND C411 RAIL TYPES

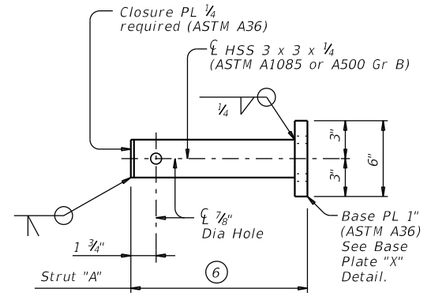

FOR T411 AND C411 RAIL TYPES

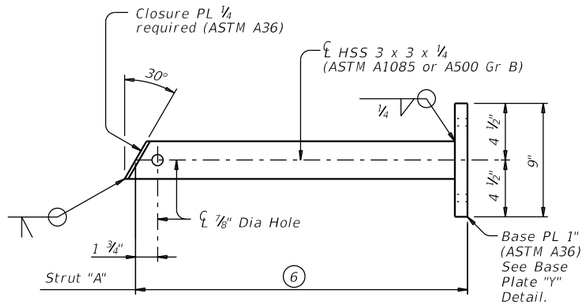

FOR T221, C221, T222, T223, C223, T401, T402, C402, T551, T552, T80HT, T80SS AND SSTR RAIL TYPES

UPPER STRUT DETAIL FOR (TYPE S MOUNT)

(Used for skews over 30°)

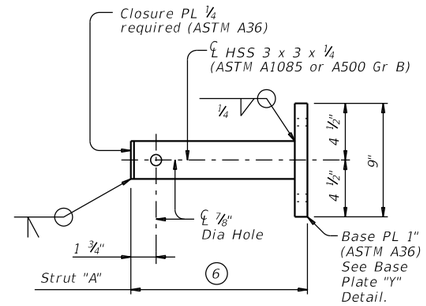

FOR T221, C221, T222, T223, C223, T401, T402, C402, T551, T552, T80HT, T80SS AND SSTR RAIL TYPES

UPPER STRUT DETAIL FOR (TYPE N MOUNT)

(Used for 0° to 30° skews)

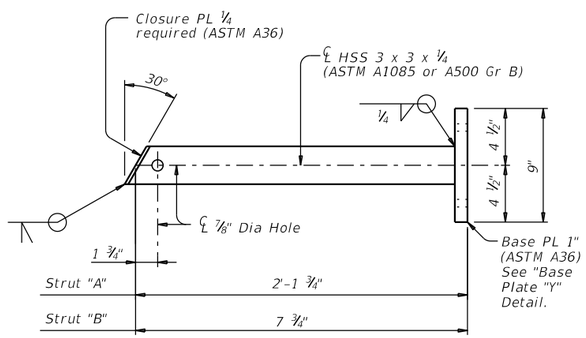

LOWER STRUT DETAILS FOR (TYPE S MOUNT)

(Used for skews over 30°)

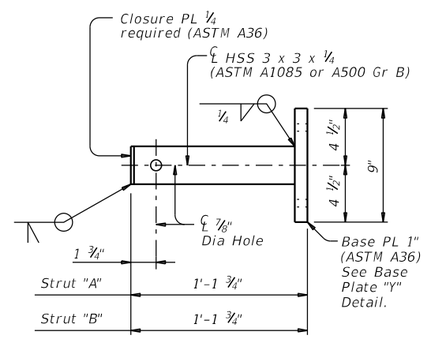

LOWER STRUT DETAILS FOR (TYPE N MOUNT)

(Used for 0° to 30° skews)

③ At the Contractor's option fully threaded adhesive anchors may be use instead of cast-in-place anchor bolts. Expansion anchors are not allowed. Provide adhesive anchors that are ¾" Dia ASTM A193 Gr B7 or F1554 Gr 105 fully threaded rods with one hardened steel washer (ASTM F436) and one regular lock washer placed under heavy hex nut (ASTM A563). Embed fully threaded rods using a Type III, Class C, D, E, or F anchor adhesive. Adhesive anchor embedment depth is 8". Anchor adhesive chosen must be able to achieve a factored bond strength in tension of 2.2 kips per anchor (edge distance and spacing must be accounted for). Submit signed and sealed calculations or the manufacturer's published literature showing the proposed anchor adhesive's ability to develop this load to the Engineer for approval prior to use. Anchor installation, including hole size, drilling, and clean out, must be in accordance with Item 450, "Railing".

⑥ Adjust length to accommodate edge of slab to back of rail for specific project conditions and to help plumb the vertical face of clearance sign.

⑦ Hole required to drain zinc from base plate during galvanizing.

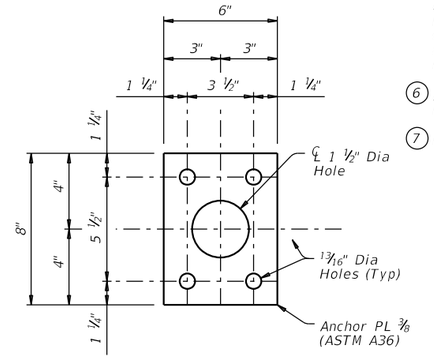

PLAN OF ANCHOR PLATE

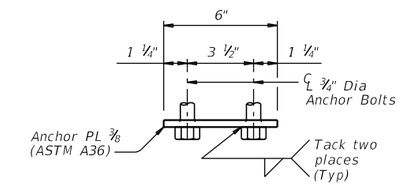

ELEVATION

ANCHOR BOLT ASSEMBLY DETAILS ③

(Used on Base Plate "X" with T411 and C411 rail types.)

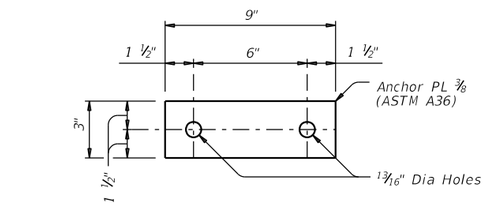

PLAN OF ANCHOR PLATE

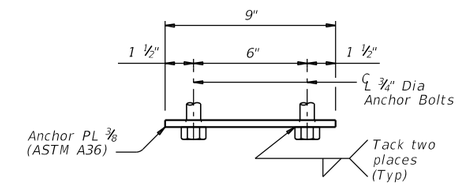

ELEVATION

ANCHOR BOLT ASSEMBLY DETAILS ③

(Used on Base Plate "Y" and with T1F, T2P, C2P, T1W, C1W, T66 and C66 rail types.)

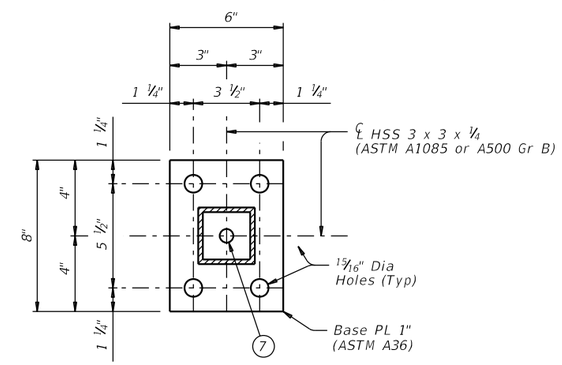

BASE PLATE "X" DETAIL

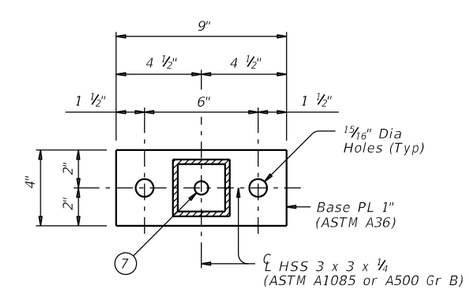

BASE PLATE "Y" DETAIL

℄ ¾" Dia heavy hex head anchor bolt (ASTM F3125 Gr A325 or A449) or threaded rod (ASTM A193 Gr B7 or F1554 Gr 105) with one hardened washer and one regular lock washer placed under heavy hex nut (ASTM A563). Furnish one additional heavy hex nut for each threaded rod.

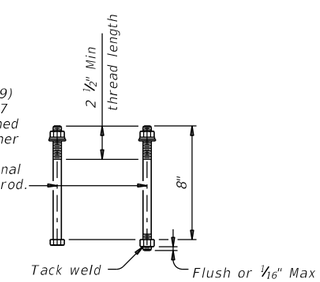

CAST-IN-PLACE ANCHOR BOLT OPTIONS ③

SHEET 2 OF 3

Texas Department of Transportation — Bridge Division Standard

BRIDGE MOUNTED CLEARANCE SIGN ASSEMBLY

BMCS

FILE:	DN: TxDOT	CK: TxDOT	DW: TxDOT	CK: TxDOT
©TxDOT April 2019	CONT	SECT	JOB	HIGHWAY
REVISIONS	0684	01	068	SH 550
	DIST		COUNTY	SHEET NO.
	PHARR		CAMERON	

DATE:
FILE:

Docusign Envelope ID: D24B0E46-A040-4DCF-9159-2076E4A3664D

DISCLAIMER:
The use of this standard is governed by the "Texas Engineering Practice Act". No warranty of any kind is made by TxDOT for any purpose whatsoever. TxDOT assumes no responsibility for the conversion of this standard to other formats or for incorrect results or damages resulting from its use.

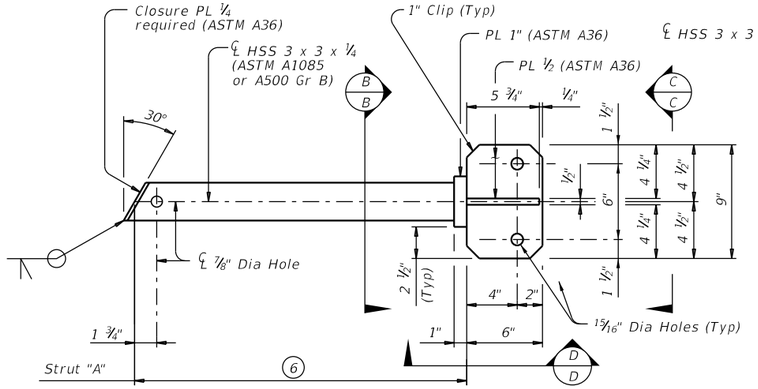

FOR T1F, T2P, C2P, T1W, C1W, T66 AND C66 RAIL TYPES

UPPER STRUT DETAIL FOR (TYPE S MOUNT)

(Used for skews over 30°)

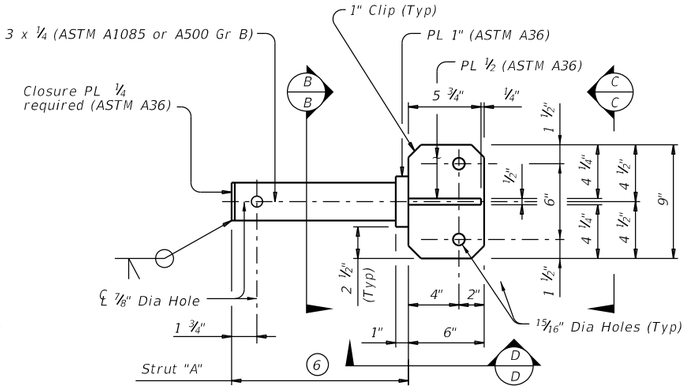

FOR T1F, T2P, C2P, T1W, C1W, T66 AND C66 RAIL TYPES

UPPER STRUT DETAIL FOR (TYPE N MOUNT)

(Used for 0° to 30° skews)

(2) ℄ ⅜" Dia x 2" Hexagon socket button head cap screws (ASTM A574) with hex nuts. Attach hex nuts to L 3 x 3 x ½ by tack welding in two places. Threads must have Class 3A fit tolerance in accordance ASME B1.1. Six screws required.

(3) At the Contractor's option fully threaded adhesive anchors may be use instead of cast-in-place anchor bolts. Expansion anchors are not allowed. Provide adhesive anchors that are ¾" Dia ASTM A193 Gr B7 or F1554 Gr 105 fully threaded rods with one hardened steel washer (ASTM F436) and one regular lock washer placed under heavy hex nut (ASTM A563). Embed fully threaded rods using a Type III, Class C, D, E, or F anchor adhesive. Adhesive anchor embedment depth is 8". Anchor adhesive chosen must be able to achieve a factored bond strength in tension of 2.2 kips per anchor (edge distance and spacing must be accounted for). Submit signed and sealed calculations or the manufacturer's published literature showing the proposed anchor adhesive's ability to develop this load to the Engineer for approval prior to use. Anchor installation, including hole size, drilling, and clean out, must be in accordance with Item 450, "Railing".

(4) For decked slab beams topped with a 2 course surface treatment and ACP overlay.

(6) Adjust length to accommodate edge of slab to back of rail for specific project conditions and to help plumb the vertical face of clearance sign.

(8) Hole required in bottom of HSS to drain zinc during galvanizing.

(9) 11" curb is for structures with 2" ACP overlay.

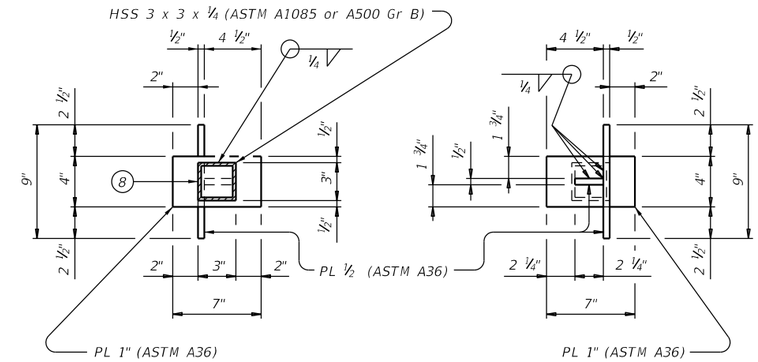

FOR 9" HIGH CURBS

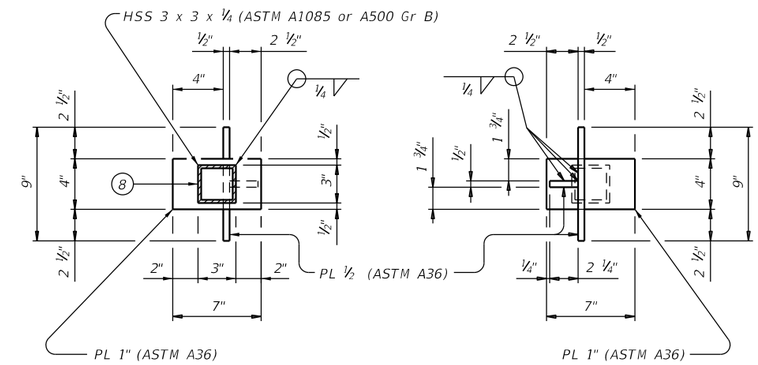

FOR 11" HIGH CURBS

SECTION B-B

VIEW C-C

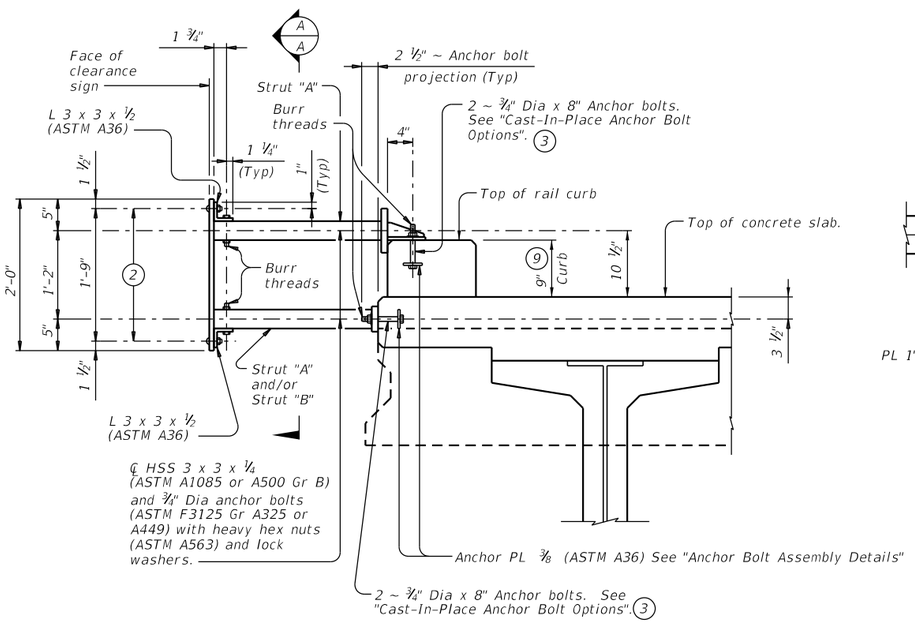

SECTION THRU T1F, T2P, C2P, T1W, C1W, T66 AND C66 RAIL CURB

Showing sign mount on a 9" high curb, 11" high curb similar.

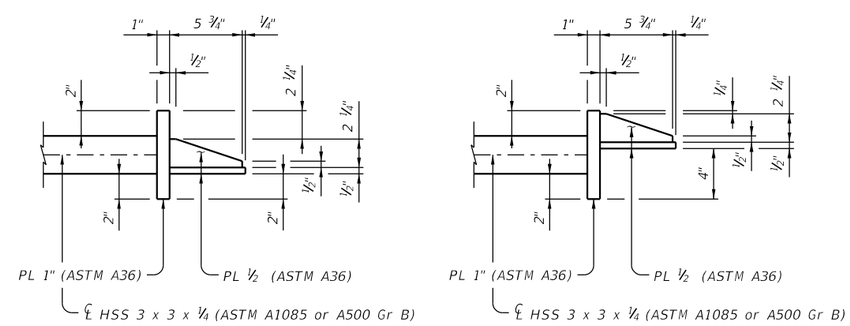

FOR 9" HIGH CURBS

FOR 11" HIGH CURBS

VIEW D-D

SHEET 3 OF 3

Texas Department of Transportation — Bridge Division Standard

BRIDGE MOUNTED CLEARANCE SIGN ASSEMBLY

BMCS

FILE:	DN: TxDOT	CK: TxDOT	DW: TxDOT	CK: TxDOT
©TxDOT April 2019	CONT	SECT	JOB	HIGHWAY
REVISIONS	0684	01	068	SH 550
	DIST		COUNTY	SHEET NO.
	PHARR		CAMERON	

DATE:
FILE:

Docusign Envelope ID: D24B0E46-A040-4DCF-9159-2076E4A3664D

DISCLAIMER:
The use of this standard is governed by the "Texas Engineering Practice Act". No warranty of any kind is made by TxDOT for any purpose whatsoever. TxDOT assumes no responsibility for the conversion of this standard to other formats or for incorrect results or damages resulting from its use.

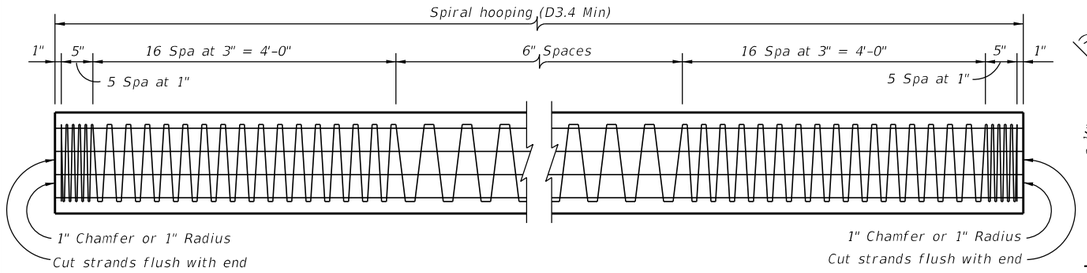

PILE DETAILS

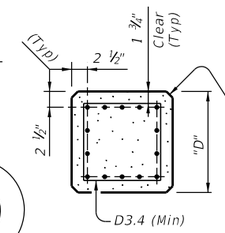

TYPICAL SECTION THRU PILE (1)

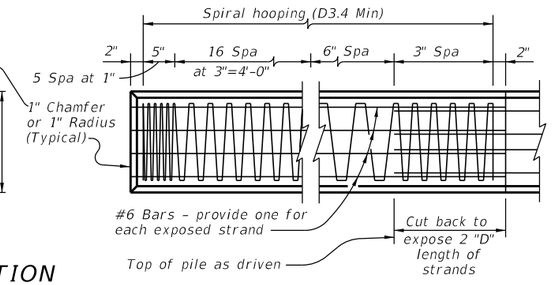

PILE BUILD-UP DETAIL (2)

TABLE OF PROPERTIES FOR PRESTRESSED CONCRETE PILES

Pile Size "D"	Area of Pile Section	I	Weight	Prestressing (5)				
				Size	No.	Initial Prestress Force		Concrete Final Prestress (15% Loss)
						each	Total	
	in^2	in^4	Lb/Ft	in		kips	kips	psi
16"	254	5,340	265	½"	8	28.9	231	774
				0.6	8	29	232	776
18"	322	8,600	336	½"	10	28.9	289	763
				0.6	8	36	288	760
20"	398	13,150	415	½"	14	28.9	405	864
				0.6	12	34	408	871
24"	574	27,380	598	½"	18	28.9	520	770
				0.6	12	44	528	782

(1) Locate strands symmetrically about the axis of the pile, with no more than one strand difference between any two adjacent sides.

(2) Provide Class S concrete (f'c = 4,000 psi) for pile build-ups.

(3) Use typical pile embedment details unless shown otherwise elsewhere in the plans. Payment for piles will be in accordance with the details shown. Strip back piling and extend prestressing strands into substructure when piling conflicts with substructure reinforcing or when the side cover from pile edge to substructure edge is less than 4" after driving.

(4) When stripped back piles are required, strip back piling after driving or cast short with strands protruding from top of piling as shown.

(5) Provide ½" or 0.6" 270 ksi low relaxation strands tensioned to the forces shown in the table. If an optional design is used, provide a minimum concrete final prestress of 750 psi. Submit optional designs for approval.

(6) Saw cut ½" deep around perimeter of pile at the breakback line.

(7) Unless shown otherwise.

(8) ¾" deformed bar anchors (DBA), electric arc-welded to stinger anchor plate with complete fusion.

(9) Place center of stinger within ½" of center of piling.

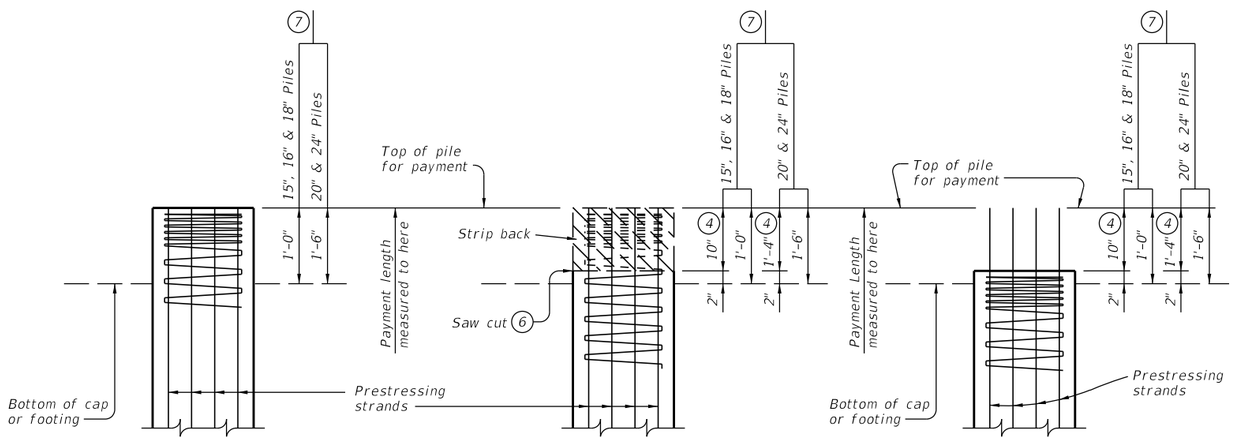

TYPICAL PILE EMBEDMENT

PILE STRIPPED BACK AFTER DRIVING

PILE CAST WITH PRESTRESSING STRANDS PROTRUDING

PILE EMBEDMENT DETAILS (3)

FABRICATION NOTES:

Provide Class H concrete. Provide sulfate resistant concrete when required.

Minimum release strength, f'ci = 4,000 psi.

Minimum 28-day strength, f'c = 5,000 psi.

All dimensions relating to prestressing steel are to centers of strands.

Provide Grade 60 reinforcing steel.

Provide deformed wire reinforcement meeting ASTM A1064.

GENERAL NOTES:

See Bridge Layout for size, number, and length of piling.

See Bridge Layout or elsewhere in the plans for stinger assembly requirements. Stinger assembly is subsidiary to the pile.

Shop drawing submittal and approval is not required if fabrication is in accordance with the details shown on this standard.

For treatment of damaged pile and the lifting loops, see the Concrete Repair Manual.

Cover dimensions are clear dimensions, unless noted otherwise.

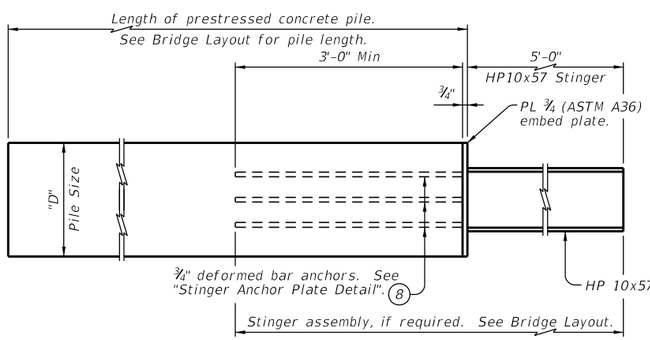

SIDE ELEVATION

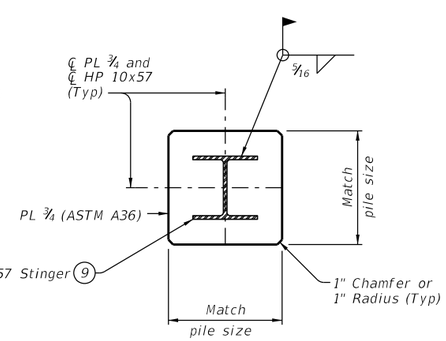

STINGER SECTION

TYPICAL PILE AND STINGER ASSEMBLY DETAILS

Pile strands, reinforcing, and holes in stinger anchor plate not shown for clarity.

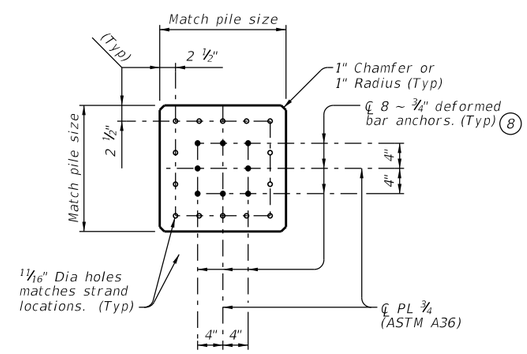

STINGER ANCHOR PLATE DETAIL

Showing stinger anchor plate for 20" pile, stinger anchor plates for other pile sizes are similar.

Texas Department of Transportation — Bridge Division Standard

PRESTRESSED CONCRETE PILING

CP

FILE:	DN: TxDOT	CK: TxDOT	DW: TxDOT	CK: TxDOT
©TxDOT April 2019	CONT	SECT	JOB	HIGHWAY
REVISIONS	0684	01	068	SH 550
3/2023: Added 0.6" strand option.	DIST		COUNTY	SHEET NO.
	PHARR		CAMERON	

DATE:
FILE:

Docusign Envelope ID: D24B0E46-A040-4DCF-9159-2076E4A3664D

DISCLAIMER:
The use of this standard is governed by the "Texas Engineering Practice Act". No warranty of any kind is made by TxDOT for any purpose whatsoever. TxDOT assumes no responsibility for the conversion of this standard to other formats or for incorrect results or damages resulting from its use.

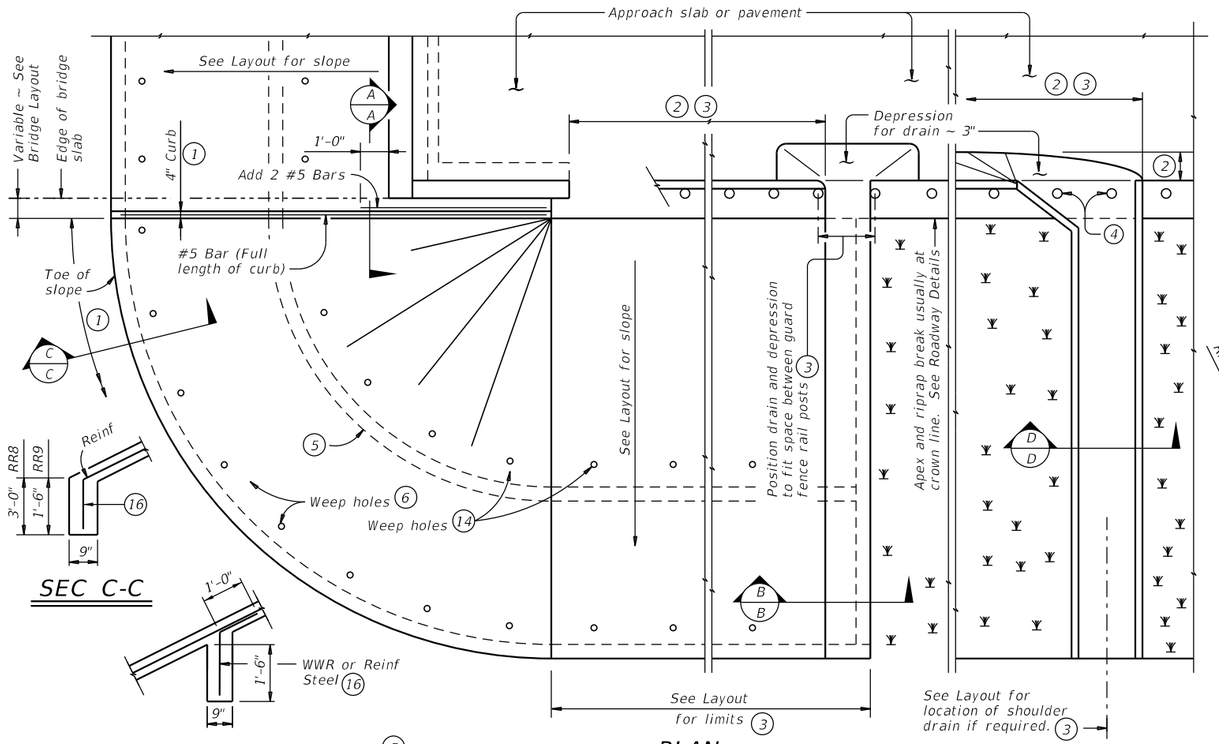

PLAN

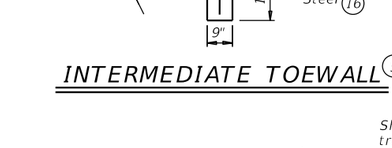

SEC C-C

INTERMEDIATE TOEWALL

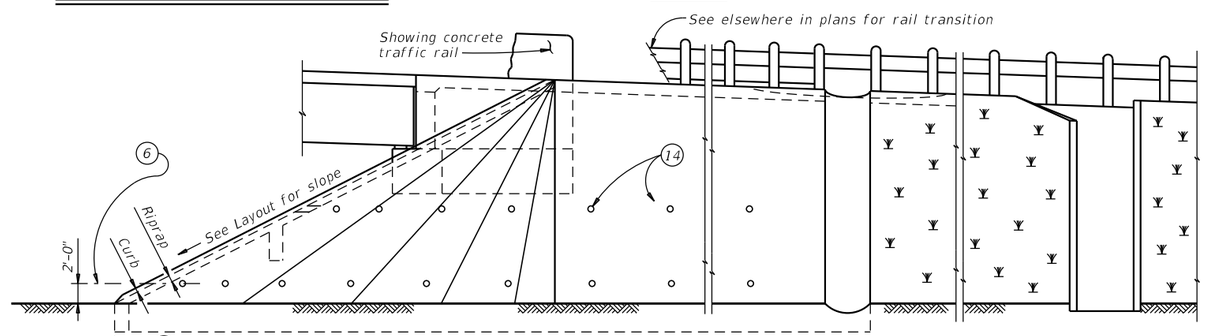

ELEVATION

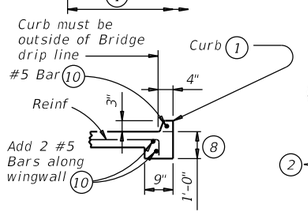

SEC A-A

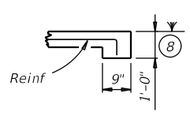

SEC B-B

(No drain)

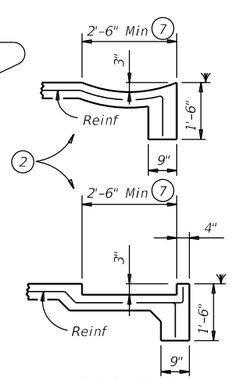

SEC B-B

(Shoulder drain integral with riprap)

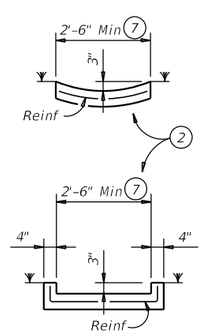

SEC D-D

(Shoulder drain)

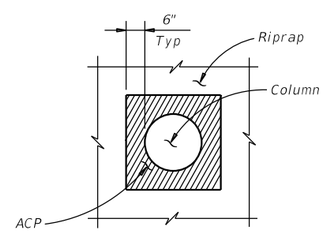

Riprap blockout to be filled with ACP. (Subsidiary to riprap)

RIPRAP DETAIL AT COLUMNS

(As directed by the Engineer)

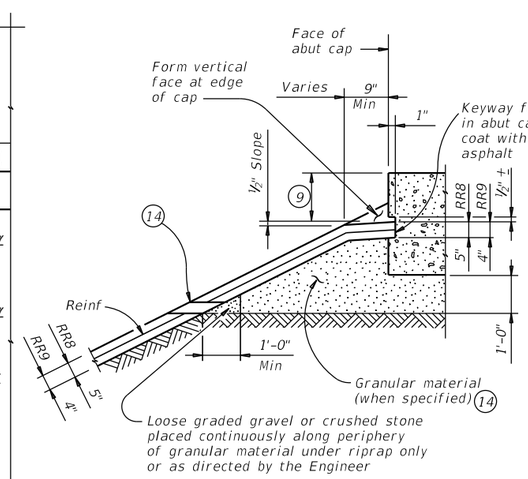

SHOWING KEYWAY OPTION

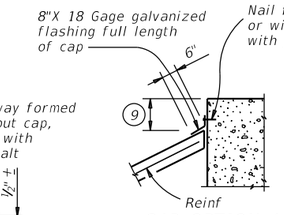

CAP OPTION A

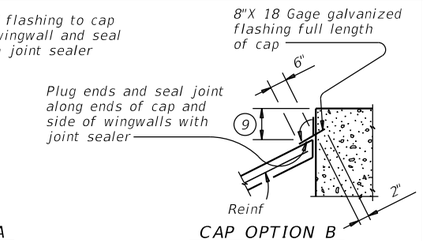

CAP OPTION B

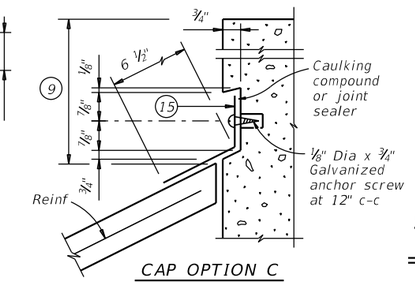

CAP OPTION C

SECTIONS THRU RIPRAP AT CAP (11)

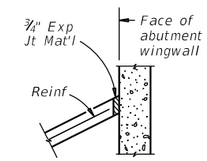

SECT THRU RIPRAP AT WINGWALL (12)

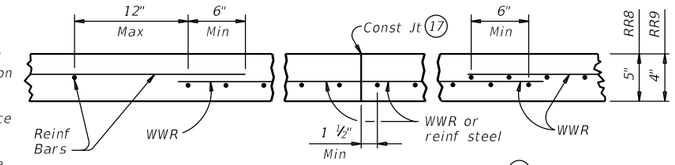

REINFORCEMENT DETAILS (13)

See General Notes for optional synthetic fiber reinforcement.

1. When riprap is shown extended around header on layout, extend slab and toewall as shown and eliminate 4" curb.
2. Limits and configuration of drains and depressions are as shown elsewhere in plans or as directed by the Engineer.
3. Location of shoulder drain must consider limitations imposed by rail transition. Do not locate shoulder drains at expansion joints between approach slab and concrete pavement.
4. See details elsewhere in plans for installation of guard fence posts through concrete riprap.
5. Provide intermediate toewall only when designated elsewhere in the plans or included in the specifications.
6. Provide lower level of 2" Dia weep holes at 10' c-c backed by 1 CF packet of gravel and galvanized hardware cloth at all locations unless directed by the Engineer to eliminate.
7. Use wider or other drain configurations if shown elsewhere in plans or if directed by the Engineer.
8. Wall extension may be reduced or modified if approved by the Engineer. Increase wall extension to 1'-6" whenever the optional intermediate toewall is called for in the plans.
9. Top of cap to top of riprap dimension varies as directed by the Engineer. Should be 9" Min for beam/slab type bridges and 1'-6" for slab span, box beam, or slab beam bridges.
10. #5 bars shown are required even when synthetic fiber reinforcing option is selected.
11. Provide sealing option for joint between the face of cap and riprap as designated by the Engineer or as shown elsewhere on plans.
12. Flashing (shown in Cap Option A) may be used at wingwall in addition to Exp Jt Mat'l if shown on plans or directed by the Engineer.
13. Provide #3 reinforcing bars at 18" Spa c-c. Provide Welded Wire Reinforcement (WWR) as 6x6-D2.9xD2.9 or D3xD3. Combinations of WWR and reinforcing bars may be used if both are permitted. Use lap splices of a minimum 6 inches, measured from the transverse wire of WWR, and the ends of reinforcing bars.
14. If granular material is specified, provide upper level of 2" Dia weep holes at 10' c-c backed by galvanized hardware cloth.
15. 8" x 18 Gage Galv Sheet Metal
16. Provide WWR or #3 bars, with 1'-0" extension into slope.
17. WWR or reinforcing steel is continuous through riprap construction joints. Provide WWR or reinforcing steel that extends 1'-1" minimum into adjacent riprap on each side of construction joint even if synthetic reinforcing fiber is utilized.

FOR CONTRACTOR'S INFORMATION ONLY:
5" of RR8 = 0.015 CY/SF
4" of RR9 = 0.012 CY/SF
#3 Reinf at 18" c-c = 0.501 Lbs/SF
6x6-D3xD3 = 0.408 Lbs/SF

GENERAL NOTES:

Provide Class "B" concrete (f'c = 2,000 psi) unless noted elsewhere in plans.

Provide Grade 60 reinforcing steel.

Provide deformed welded wire reinforcement (WWR) meeting ASTM A1064, unless otherwise shown.

Provide reinforcing bars, deformed WWR, or any suitable combination of both types for riprap reinforcing, unless specified elsewhere in the plans.

Optionally synthetic fibers may be used if approved by the Engineer. Provide synthetic fibers listed on the "Fibers for Concrete" Material Producer List (MPL) in lieu of steel reinforcing in riprap concrete.

Install construction joints or grooved joints extending the full slant slope height at intervals of approximately 20 feet unless otherwise directed by the Engineer.

Hardware cloth, loose grade stone behind weep holes, flashing, or other sealing material are subsidiary to the bid item "Riprap".

See Layout for limits of riprap.

RR8 is to be used on stream crossings.

RR9 is to be used on other embankments.

Texas Department of Transportation — Bridge Division Standard

CONCRETE RIPRAP AND SHOULDER DRAINS
EMBANKMENTS AT BRIDGE ENDS (TYPES RR8 & RR9)

CRR

FILE:	DN: TxDOT	CK: TxDOT	DW: TxDOT	CK: TxDOT
©TxDOT April 2019	CONT	SECT	JOB	HIGHWAY
REVISIONS	0684	01	068	SH 550
	DIST		COUNTY	SHEET NO.
	PHARR		CAMERON	

DATE:
FILE:

Docusign Envelope ID: D24B0E46-A040-4DCF-9159-2076E4A3664D

DISCLAIMER:
The use of this standard is governed by the "Texas Engineering Practice Act". No warranty of any kind is made by TxDOT for any purpose whatsoever. TxDOT assumes no responsibility for the conversion of this standard to other formats or for incorrect results or damages resulting from its use.

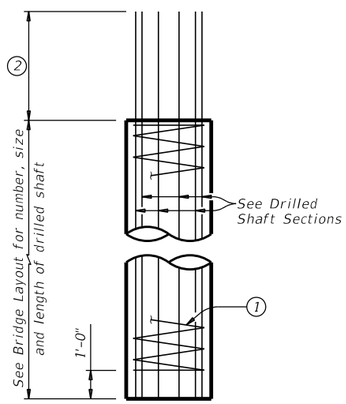

ABUTMENTS, WINGWALLS AND MULTI-DRILLED SHAFT FOOTINGS

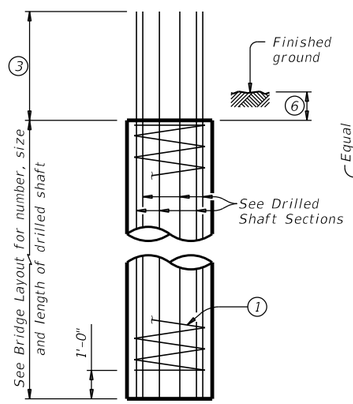

INTERIOR BENTS DRILLED SHAFT DIA EQUAL TO COLUMN DIA

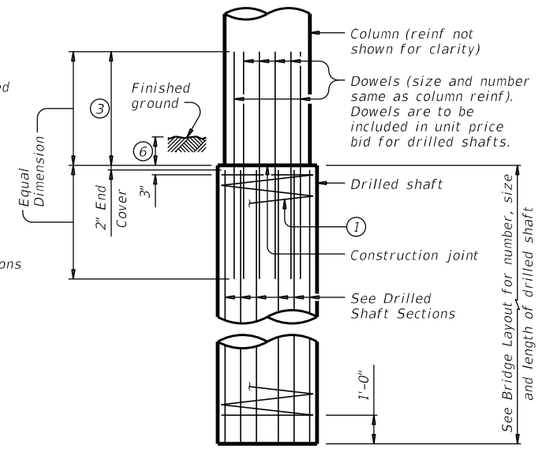

INTERIOR BENTS DRILLED SHAFT DIA GREATER THAN COLUMN DIA

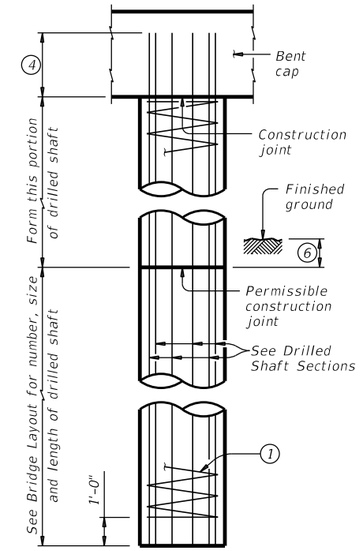

OPTIONAL INTERIOR BENT DRILLED SHAFT DETAIL 5

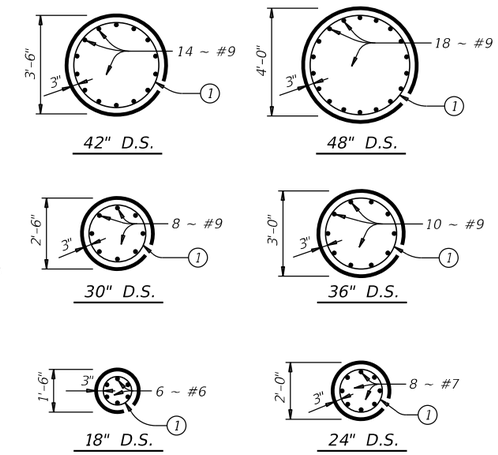

DRILLED SHAFT SECTIONS

DRILLED SHAFT DETAILS

1. #3 spiral at 6" pitch (one and a half flat turns top and bottom).
2. Min extension into supported element:
   #6 Bars = 1'-11"
   #7 Bars = 2'-0"
   #9 Bars = 2'-3"
3. Min lap with column reinf:
   #7 Bars = 2'-11"
   #9 Bars = 3'-9"
   #11 Bars = 4'-8"
4. Min extension into supported element:
   #6 Bars = 1'-11"
   #7 Bars = 2'-3"
   #9 Bars = 2'-9"
5. Drilled shafts may extend to the bottom of bent caps for "H" heights of 6 ft and less (as shown on the Bridge Layout), if approved. This option can only be used when the drilled shaft diameter equals the column diameter. Obtain approval of the forming method above the ground line prior to construction. No adjustments in payment will be made if this option is used.
6. 1'-0" Min, unless shown otherwise on plans.
7. Or as shown on plans.

TABLE OF PILE EMBEDMENT	
Pile Type	Embedment Depth (Ft)
16" Sq Concrete 18" Sq Concrete HP14 Steel HP16 Steel	1'-0"
20" Sq Concrete 24" Sq Concrete HP18 Steel	1'-6"

See Prestressed Concrete Piling (CP) standard for additional details on concrete pile embedment.

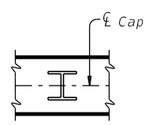

ORIENTATION OF STEEL H-PILING

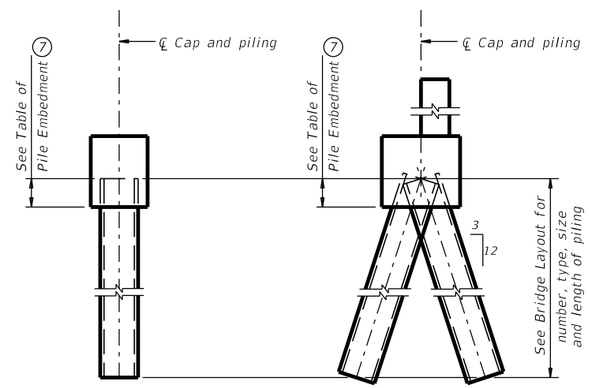

VERTICAL PILE

BATTERED PILE

PILING DETAILS

(Concrete or steel H)

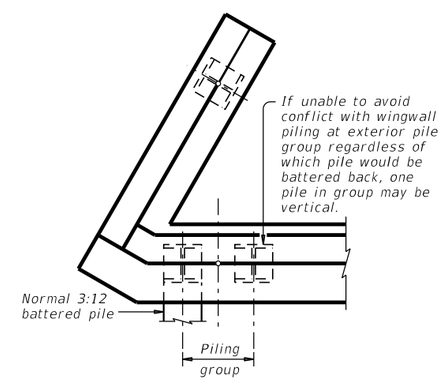

DETAIL "A"

(Showing plan view of a 30° skewed abutment)

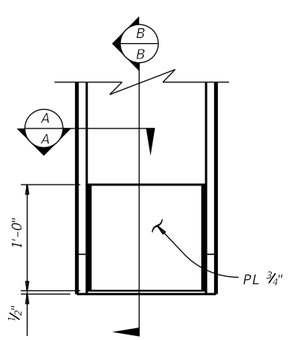

ELEVATION

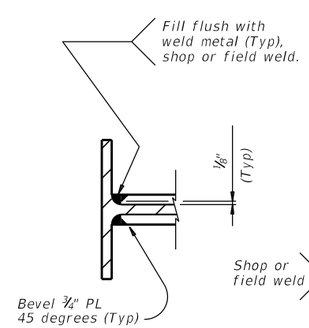

SECTION A-A

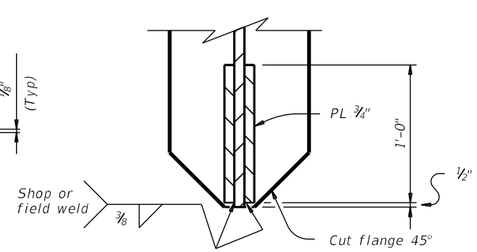

SECTION B-B

STEEL H-PILE TIP REINFORCEMENT

See Item 407 "Steel Piling" to determine when tip reinforcement is required and for options to the details shown.

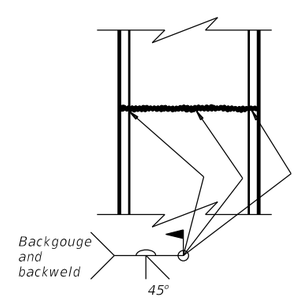

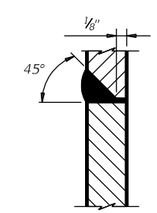

SECTION THRU FLANGE OR WEB

STEEL H-PILE SPLICE DETAIL

Use when required.

SHEET 1 OF 2

Texas Department of Transportation — Bridge Division Standard

COMMON FOUNDATION DETAILS

FD

FILE:	DN: TxDOT	CK: TxDOT	DW: TxDOT	CK: TxDOT
©TxDOT April 2019	CONT	SECT	JOB	HIGHWAY
REVISIONS	0684	01	068	SH 550
01-20: Added #11 bars to the FD bars.	DIST		COUNTY	SHEET NO.
	PHARR		CAMERON	

DATE:
FILE:

Docusign Envelope ID: D24B0E46-A040-4DCF-9159-2076E4A3664D

DISCLAIMER:
The use of this standard is governed by the "Texas Engineering Practice Act". No warranty of any kind is made by TxDOT for any purpose whatsoever. TxDOT assumes no responsibility for the conversion of this standard to other formats or for incorrect results or damages resulting from its use.

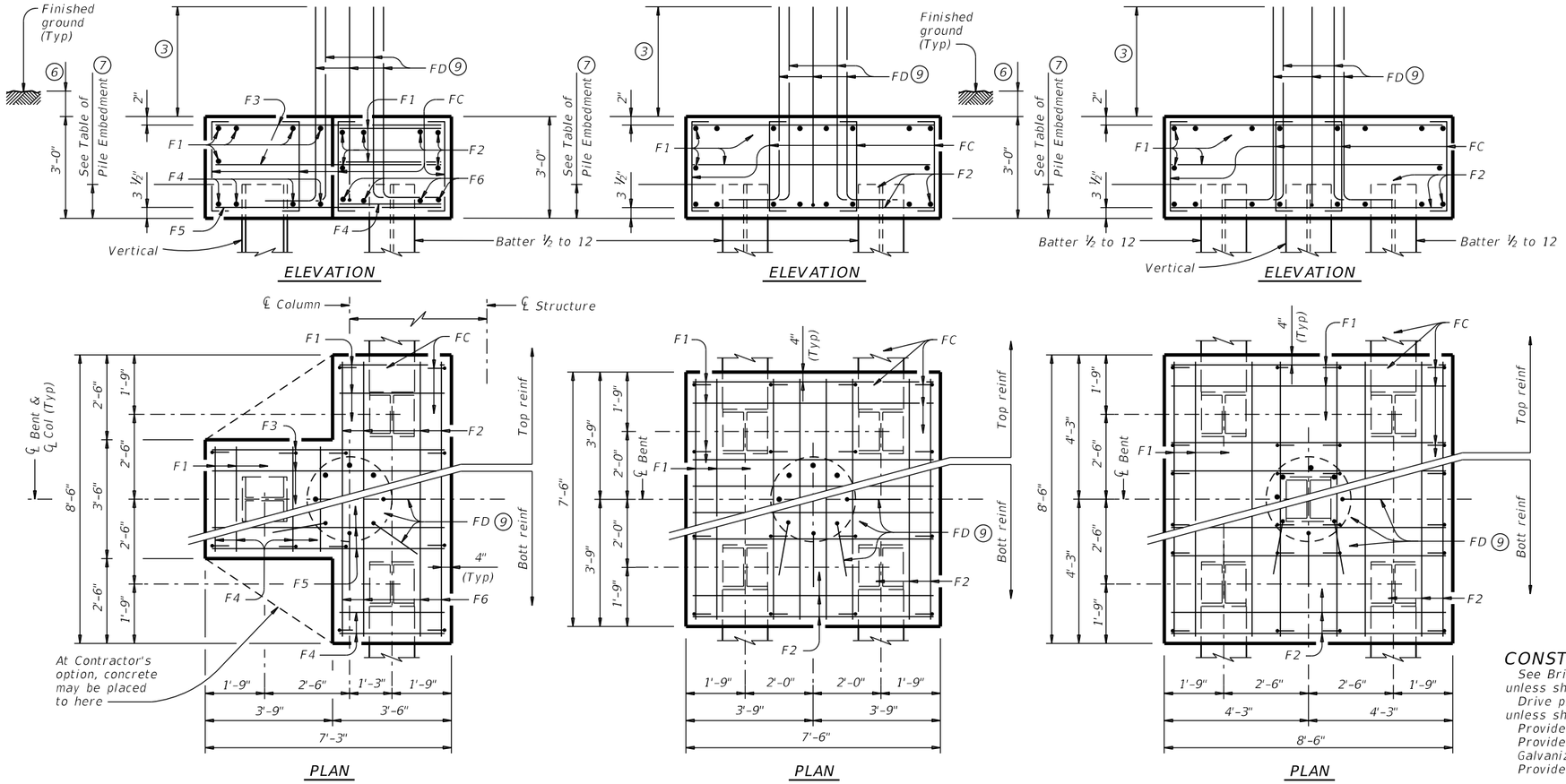

THREE PILE FOOTING (8)

For 36" Dia and smaller columns.

FOUR PILE FOOTING (8)

For 42" Dia and smaller columns.

FIVE PILE FOOTING (8)

For 42" Dia and smaller columns.

TABLE OF FOOTING QUANTITIES FOR 30" COLUMNS

ONE 3 PILE FOOTING				
Bar	No.	Size	Length	Weight
F1	11	#4	3'- 2"	23
F2	6	#4	8'- 2"	33
F3	6	#4	6'- 11"	28
F4	8	#9	3'- 2"	86
F5	4	#9	6'- 11"	94
F6	4	#9	8'- 2"	111
FC	12	#4	3'- 6"	28
FD (10)	8	#9	8'- 1"	220
Reinforcing Steel			Lb	623
Class "C" Concrete			CY	4.8

ONE 4 PILE FOOTING				
Bar	No.	Size	Length	Weight
F1	20	#4	7'- 2"	96
F2	16	#8	7'- 2"	306
FC	16	#4	3'- 6"	37
FD (10)	8	#9	8'- 1"	220
Reinforcing Steel			Lb	659
Class "C" Concrete			CY	6.3

ONE 5 PILE FOOTING				
Bar	No.	Size	Length	Weight
F1	20	#4	8'- 2"	109
F2	16	#9	8'- 2"	444
FC	24	#4	3'- 6"	56
FD (10)	8	#9	8'- 1"	220
Reinforcing Steel			Lb	829
Class "C" Concrete			CY	8.0

CONSTRUCTION NOTES:

See Bridge Layout for foundation type required. Use these foundation details unless shown otherwise.

Drive piling under abutment wingwalls to a minimum resistance of 10 Tons/Pile unless shown otherwise.

Provide Class C Concrete (f'c = 3,600 psi), unless shown otherwise.

Provide Grade 60 reinforcing steel.

Galvanize reinforcing if shown elsewhere in the plans.

Provide bar laps for drilled shaft reinforcing, where required, as follows:

Uncoated or galvanized (#6) ~ 2'-6"
Uncoated or galvanized (#7) ~ 2'-11"
Uncoated or galvanized (#9) ~ 3'-9"

GENERAL NOTES:

Designed according to AASHTO LRFD Bridge Design Specifications.

Cover dimensions are clear dimensions, unless noted otherwise.
Reinforcing bar dimensions shown are out-to-out of bar.

DESIGNER NOTES:

Do not use the drilled shaft details shown on this standard for retaining wall, noise wall, barrier, or sign foundations without structural evaluation.

Do not use the footings shown on this standard in direct contact with salt water or exposed to salt water spray.

Maximum allowable pile loads for the footings shown are:

72 Tons/Pile with 24" Dia Columns
80 Tons/Pile with 30" Dia Columns
100 Tons/Pile with 36" Dia Columns
120 Tons/Pile with 42" Dia Columns

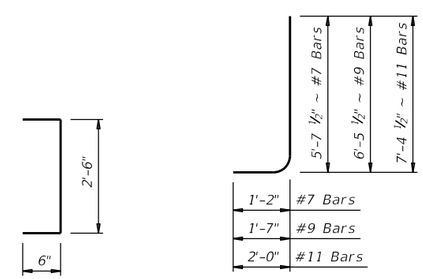

BARS FC

BARS FD (9)

(3) Min lap with column reinforcing:
#7 Bars = 2'-11"
#9 Bars = 3'-9"
#11 Bars = 4'-8"

(6) 1'-0" Min, unless shown otherwise on plans.

(7) Or as shown on plans.

(8) See Bridge Layout for type, size and length of piling.

(9) Number and size of FD bars must match column reinforcing. Tie FD bars to the top of the bottom reinforcing mat.

(10) Adjust FD quantity, size and weight as needed to match column reinforcing.

SHEET 2 OF 2

Texas Department of Transportation — Bridge Division Standard

COMMON FOUNDATION DETAILS

FD

FILE:	DN: TxDOT	CK: TxDOT	DW: TxDOT	CK: TxDOT
©TxDOT April 2019	CONT	SECT	JOB	HIGHWAY
REVISIONS 01-20: Added #11 bars to the FD bars.	0684	01	068	SH 550
	DIST		COUNTY	SHEET NO.
	PHARR		CAMERON	

DATE:
FILE:

Docusign Envelope ID: D24B0E46-A040-4DCF-9159-2076E4A3664D

DISCLAIMER:
The use of this standard is governed by the "Texas Engineering Practice Act". No warranty of any kind is made by TxDOT for any purpose whatsoever.
TxDOT assumes no responsibility for the conversion of this standard to other formats or for incorrect results or damages resulting from its use.

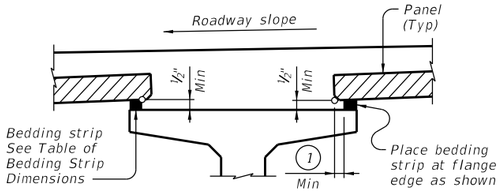

NORMAL GRADING DETAIL (3)

Showing prestressed concrete I-girders.
(Other beam types similar)

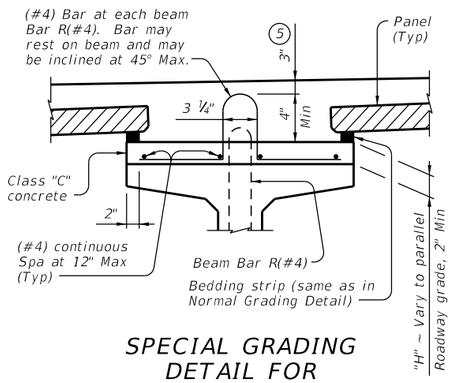

SPECIAL GRADING DETAIL FOR CONCRETE BEAMS

Showing prestressed concrete I-girders.
(Other beam types similar)

TABLE OF BEDDING STRIP DIMENSIONS		
WIDTH	HEIGHT (4)	
	Min	Max
1" (Min)	½"	2"
1 ¼"	½"	2 ½"
1 ½"	½"	3"
1 ¾"	½"	3 ¼"
2"	½"	4"
2 ¼"	½"	4 ½" (2)
2 ½"	½"	5" (2)
2 ¾"	½"	5 ½" (2)
3" (Max)	½"	6" (2)

(1) 2" Min for I-girders, 1 ½" Min for all other beam types.

(2) Allowed for prestressed concrete I-girders, not allowed on other beam types.

(3) To reduce the quantity of cast-in-place concrete, bedding strip thickness may be increased in ¼" increments. Bedding strips must be comprised of one layer. Bond bedding strips to the beams with an adhesive compatible with bedding strips. Bedding strips over 2.5" high may need to be bonded to panels. The same thickness strip must be used under any one panel edge and the maximum change in thickness between adjacent panels is ¼". Alternatively, bedding strips may be cut to grade. Panels may be supported by an alternate method, using a commercial product, if approved by the Engineer of Bridge Design, Bridge Division. If bedding strips exceed 6" high for I-Girders, 4" high for all other beam types, use Special Grading Detail for Concrete Beams or submit an alternate method to the Bridge Division for approval.

(4) Height must not exceed twice the width.

(5) Provide clear cover as indicated unless otherwise shown on Span Details.

(6) See Span Details and Thickened Slab End Details for top slab reinforcement and clear cover. Transverse top slab reinforcement may rest on top of prestressed concrete panels if necessary to maintain clear cover.

(7) Space Bars UP(#4) with Beam Bars R(#4) in all areas where measured haunch exceeds 3 ½" with I-girders, and 3" for all other beam types. Epoxy coating for Bars UP is not required.

(8) Do not locate construction joints on top of a panel.

(9) Butt adjacent bedding strips together with adhesive. Cut v-notches, approx ¼" deep, in the top of the bedding strips at 8' o.c..

CONSTRUCTION NOTES:

Erected panels must bear uniformly on bedding strips of extruded polystyrene placed along top flange edges.

Placing panels to minimize joint openings is recommended.

If additional blocking is needed, special grading details for supporting the panels and extra reinforcing between beam and slab will be considered subsidiary to deck construction.

Bars U, shown on PCP-FAB, may be bent over or cut off if necessary.

Care must be taken to ensure proper cleaning of construction debris and consolidation of concrete material under the edges of the panels. Bedding strips must be placed at beam flange edges so that adequate space is provided for the mortar to flow a minimum of 1 ½" under the panels as the slab concrete is placed.

To allow the proper amount of mortar to flow between beam and panel, the minimum vertical opening must be at least ½". Roadway cross-slope reduces the opening available for entry of the mortar. Bedding strips varying in thickness across the beam are therefore required.

For clear span between U-beams less than or equal to 18", see Permissible Slab Forming Detail on Miscellaneous Slab Detail sheets, UBMS.

MATERIAL NOTES:

Provide Grade 60 reinforcing steel in the cast-in-place slab. See Table of Reinforcing Steel for size and spacing of reinforcement.

If the top and bottom layer of reinforcing steel is shown on the Span Details to be epoxy coated, then the D, E, P, & Z bars must be epoxy coated.

Provide bar Laps, where required, as follows:

Uncoated ~ #4 = 1'-7"
Epoxy Coated ~ #4 = 2'-5"

GENERAL NOTES:

Designed according to AASHTO LRFD Bridge Design Specifications.

Panel placement may follow either Option 1 or Option 2 except Option 1 must be used if the skew exceeds 45 degrees.

Use of Prestressed Concrete Panels is not permitted for horizontally curved steel plate or tub girders. See Span Details for other possible restrictions on their use.

These details are to be used in conjunction with the Span Details, PCP-FAB and other applicable standard drawings.

When panel support (bedding strips) deviates from what is shown herein, provide details signed and sealed by a professional Engineer.

Any additional reinforcement or concrete required on this standard is considered subsidiary to the bid Item "Reinforced Concrete Slab".

Cover dimensions are clear dimensions, unless noted otherwise.
Reinforcing bar dimensions shown are out-to-out of bar.

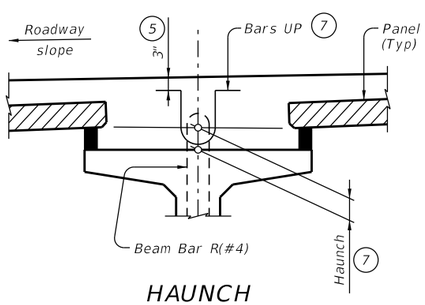

HAUNCH REINFORCING DETAIL

Showing prestressed concrete I-girders.
(Other beam types similar)

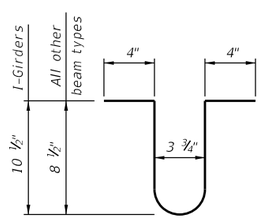

BARS UP (#4) (7)

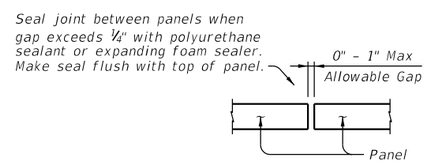

PANEL JOINTS

(Panel reinforcing not shown for clarity.
The gap cannot be considered as a panel fabrication tolerance. Adjust panel placement to minimize joint openings.)

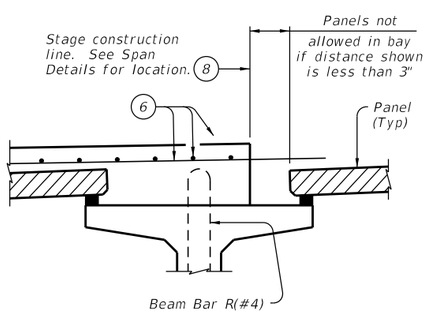

PRESTR CONC I-GIRDERS

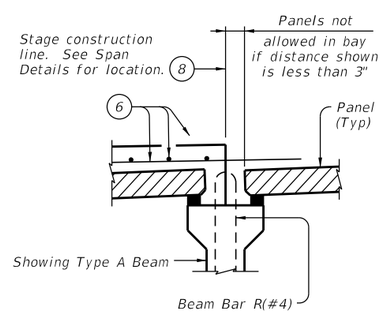

PRESTR CONC I-BEAMS

STAGE CONSTRUCTION LIMITATIONS

(Other beam types similar)

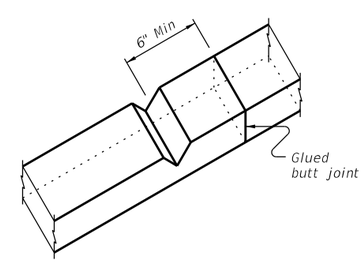

BEDDING STRIP DETAIL (9)

HL93 LOADING — SHEET 1 OF 4

Texas Department of Transportation — Bridge Division Standard

PRESTRESSED CONCRETE PANELS
DECK DETAILS

PCP

FILE:	DN: TxDOT	CK: TxDOT	DW: JTR	CK: JMH
©TxDOT April 2019	CONT	SECT	JOB	HIGHWAY
REVISIONS	0684	01	068	SH 550
3/2023: Removed top flange tension limit.	DIST	COUNTY		SHEET NO.
	PHARR	CAMERON		

DATE:
FILE:

Docusign Envelope ID: D24B0E46-A040-4DCF-9159-2076E4A3664D

DISCLAIMER:
The use of this standard is governed by the "Texas Engineering Practice Act". No warranty of any kind is made by TxDOT for any purpose whatsoever. TxDOT assumes no responsibility for the conversion of this standard to other formats or for incorrect results or damages resulting from its use.

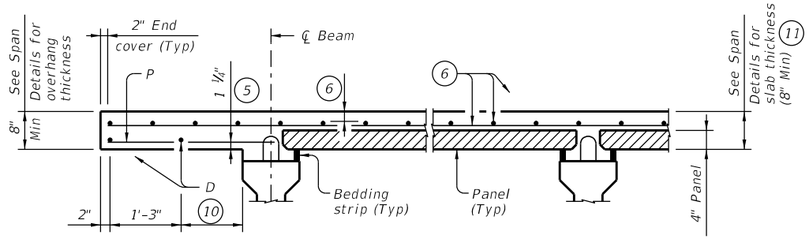

PRESTRESSED CONCRETE I-BEAMS

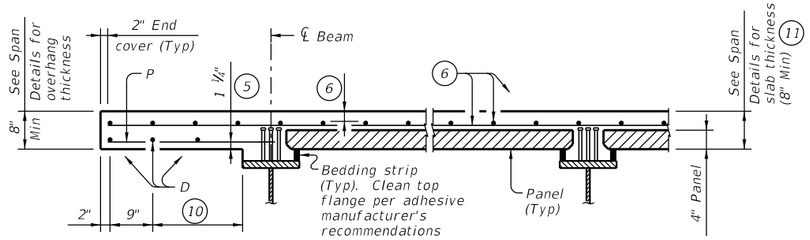

STEEL BEAMS (13)

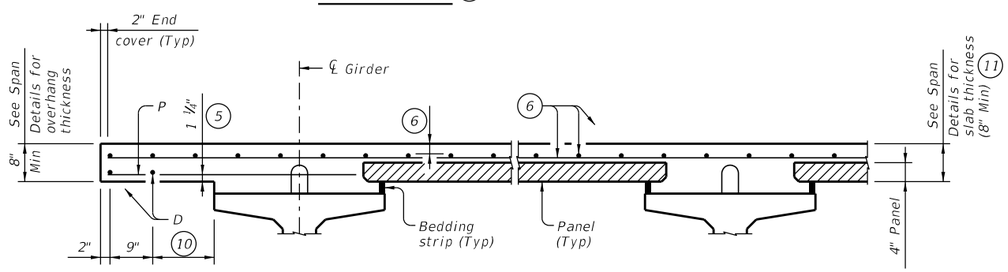

PRESTRESSED CONCRETE I-GIRDERS

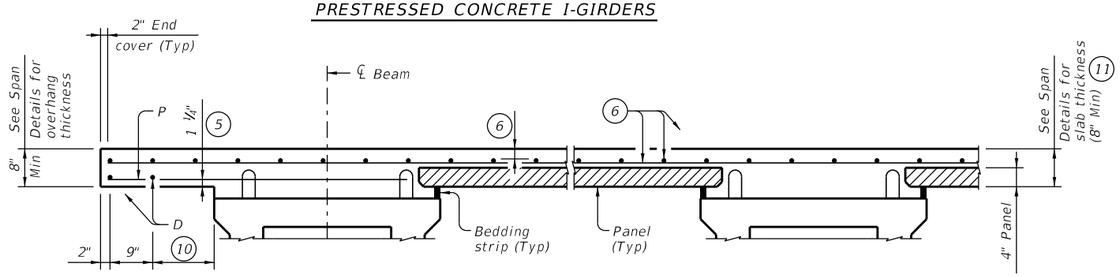

PRESTRESSED CONCRETE X-BEAMS

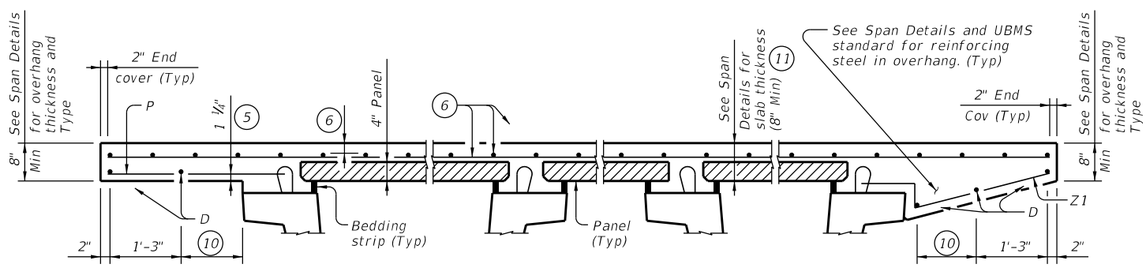

NORMAL OVERHANG WITH PRESTR CONC U-BEAMS

TYPICAL PART TRANSVERSE SECTIONS

SLOPED OVERHANG WITH PRESTR CONC U-BEAMS

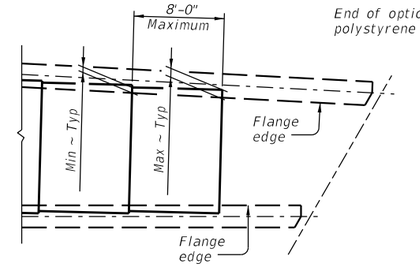

AT FLARED BEAMS OR GIRDERS

See PCP-FAB standard for Min and Max dimensions based on beam/girder type.

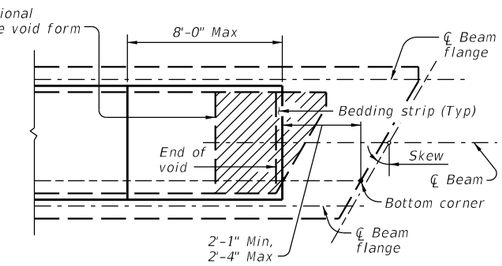

OVER CONC U-BEAMS

PART PLANS OF PANEL PLACEMENT

(5) Provide clear cover as indicated unless otherwise shown on Span Details.

(6) See Span Details and Thickened Slab End Details for top slab reinforcement and clear cover. Transverse top slab reinforcement may rest on top of prestressed concrete panels if necessary to maintain clear cover.

(9) Butt adjacent bedding strips together with adhesive. Cut v-notches, approx ¼" deep, in the top of the bedding strips at 8' o.c..

(10) Equally space additional bar if more than 1'-3" Max.

(11) The actual thickness constructed may exceed the slab thickness shown on the Span Details but the extra thickness may be no more than 2" (1" for prestressed concrete U-beams and steel beams). Bearing seat elevations or finished grade may be adjusted.

(12) Field adjust Bars Z1(#4) to match actual slope of slab overhangs. Width of slab overhang will vary along span with curved slab edges. Adjust Bar Z1(#4) dimensions to maintain proper cover. Bars Z2(#4) are located at Inverted-Tee stems only.

(13) Panels are allowed over top tension flanges, as approved by the Engineer. See Span Details for additional top mat reinforcement required in tension zones. Location of concrete placement sequence boundaries and bolted field splices should be considered by the contractor in determining panel limits.

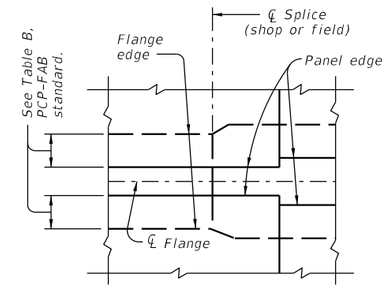

PLAN AT SPLICE

(Showing steel beams with flange width transition)

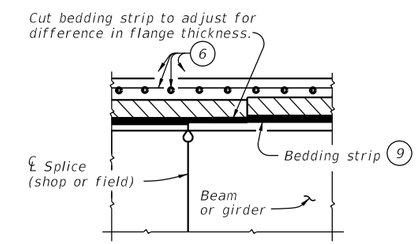

ELEVATION AT SPLICE

(Showing steel beams with different flange thickness)

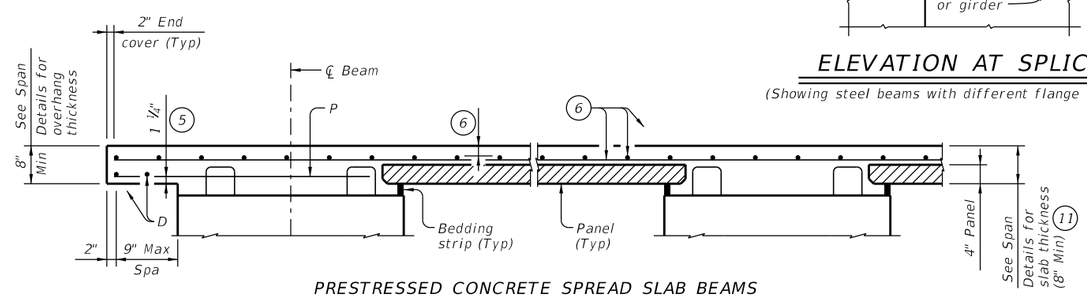

PRESTRESSED CONCRETE SPREAD SLAB BEAMS

Bars P over exterior beams are still required when no overhang is used. In this case, only one Bar D, 2" from slab edge, is required.

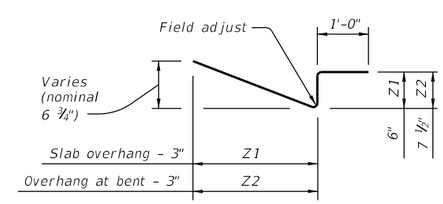

BARS Z (#4) (12)

HL93 LOADING

SHEET 2 OF 4

Texas Department of Transportation

Bridge Division Standard

PRESTRESSED CONCRETE PANELS

DECK DETAILS

PCP

FILE:	DN: TxDOT	CK: TxDOT	DW: JTR	CK: JMH
©TxDOT April 2019	CONT	SECT	JOB	HIGHWAY
REVISIONS	0684	01	068	SH 550
3/2023: Removed top flange tension limit.	DIST		COUNTY	SHEET NO.
	PHARR		CAMERON	

DATE:
FILE:

Docusign Envelope ID: D24B0E46-A040-4DCF-9159-2076E4A3664D

DISCLAIMER:
The use of this standard is governed by the "Texas Engineering Practice Act". No warranty of any kind is made by TxDOT for any purpose whatsoever. TxDOT assumes no responsibility for the conversion of this standard to other formats or for incorrect results or damages resulting from its use.

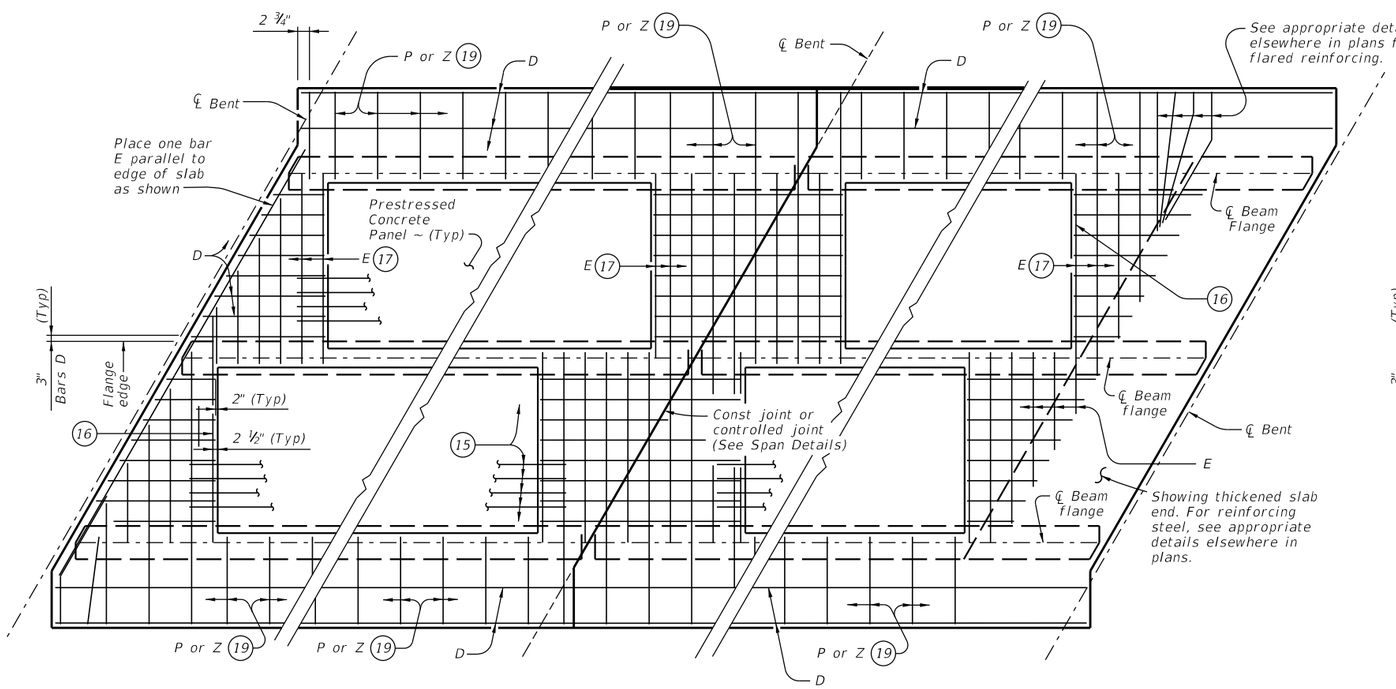

AT ALL SPAN ENDS UNLESS NOTED OTHERWISE

AT INTERIOR BENTS

AT THICKENED END SLABS

OPTION 1 ~ PLAN OF SLABS WITH NORMAL REINFORCEMENT

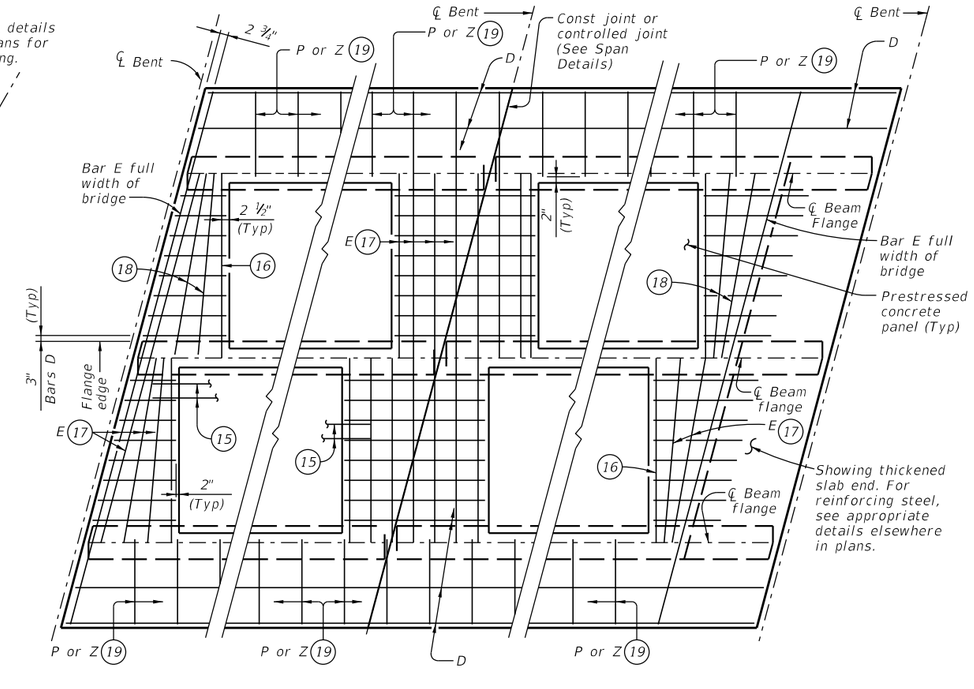

AT ALL SPAN ENDS UNLESS NOTED OTHERWISE

AT INTERIOR BENTS

AT THICKENED END SLABS

OPTION 1 ~ PLAN OF SLABS WITH SKEWED REINFORCEMENT

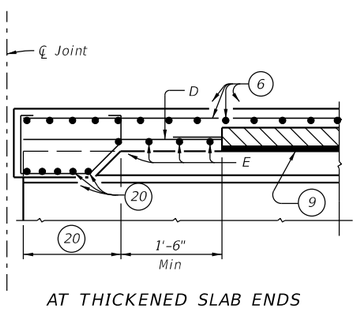

AT THICKENED SLAB ENDS FOR PRESTR CONCRETE U-BEAMS

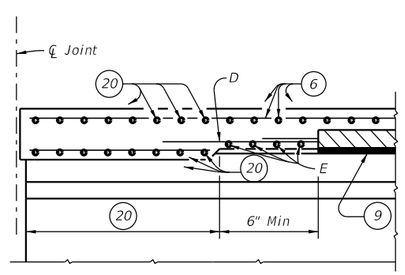

AT THICKENED SLAB ENDS FOR PRESTR CONCRETE I-BEAMS AND STEEL BEAMS

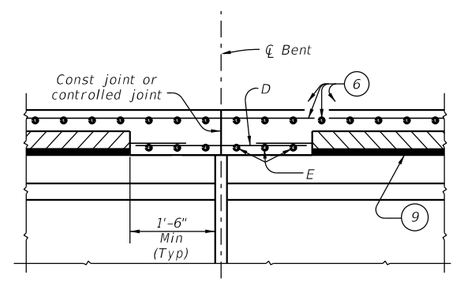

AT SLAB CONTINUOUS OVER CONVENTIONAL INTERIOR BENTS FOR ALL SIMPLE SPAN BEAMS

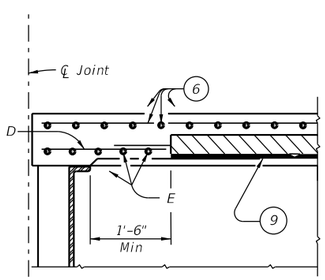

AT CONVENTIONAL END DIAPHRAGMS FOR STEEL BEAMS

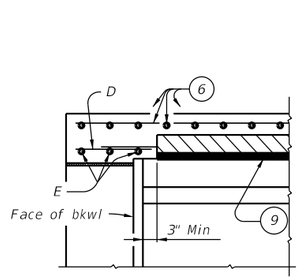

AT SLAB OVER ABUTMENT BACKWALL FOR ALL BEAMS

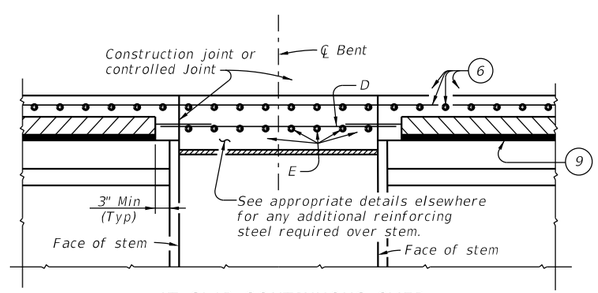

AT SLAB CONTINUOUS OVER INVERTED-T BENTS FOR ALL BEAMS

OPTION 1 ~ ELEVATIONS AT BEAM ENDS

(6) See Span Details and Thickened Slab End Details for top slab reinforcement and clear cover. Transverse top slab reinforcement may rest on top of prestressed concrete panels if necessary to maintain clear cover.

(9) Butt adjacent bedding strips together with adhesive. Cut v-notches, approx ¼" deep, in the top of the bedding strips at 8' o.c.

(14) Max Spacing as listed unless otherwise shown.

(15) At connection with cast-in-place slab, extend longitudinal panel reinforcement. See PCP-FAB for details.

(16) Maintain one Bar E(#4) parallel to panel ends (Typ).

(17) Bars E(#4) not continuous over beam flanges must overlap beam flange 6" Min.

(18) Add flared Bars E(#4) (Min Spa = 6", Max Spa = 12") as required at panel ends.

(19) Where possible, Bars E(#4) may be extended into overhangs to replace Bars P(#4). Bars Z(#4) are required for sloped overhangs with U-Beams.

(20) See appropriate thickened slab end details for reinforcing and limits of thickened slab end.

TABLE OF REINFORCING STEEL (14)

BAR	SIZE	Max Spa (in.)
D	#4	9
E	#4	9
P	#4	18
UP	#4	~
Z	#4	18

HL93 LOADING

SHEET 3 OF 4

Texas Department of Transportation

Bridge Division Standard

PRESTRESSED CONCRETE PANELS

DECK DETAILS

PCP

FILE:	DN: TxDOT	CK: TxDOT	DW: JTR	CK: JMH
©TxDOT April 2019	CONT	SECT	JOB	HIGHWAY
REVISIONS	0684	01	068	SH 550
3/2023: Removed top flange tension limit.	DIST		COUNTY	SHEET NO.
	PHARR		CAMERON	

DATE:
FILE:

Docusign Envelope ID: D24B0E46-A040-4DCF-9159-2076E4A3664D

DISCLAIMER:
The use of this standard is governed by the "Texas Engineering Practice Act". No warranty of any kind is made by TxDOT for any purpose whatsoever. TxDOT assumes no responsibility for the conversion of this standard to other formats or for incorrect results or damages resulting from its use.

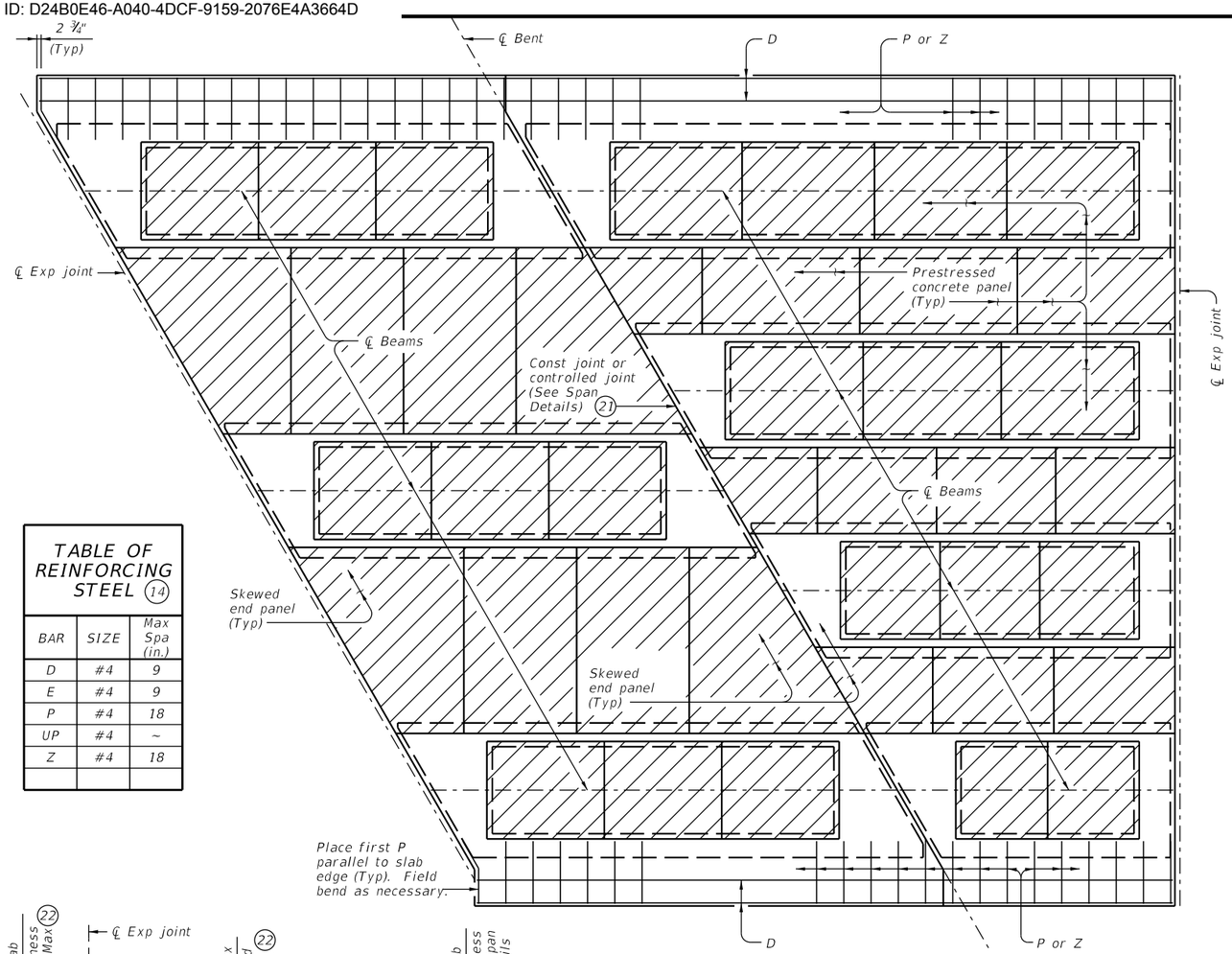

OPTION 2 ~ PLAN OF SLAB

(Showing U-Beams; other beams similar)

TABLE OF REINFORCING STEEL (14)		
BAR	SIZE	Max Spa (in.)
D	#4	9
E	#4	9
P	#4	18
UP	#4	~
Z	#4	18

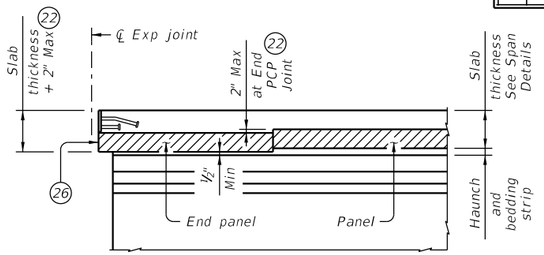

JOINTS (BETWEEN BEAMS/GIRDERS OR AT INV-T STEM)

For SEJ-B, SEJ-M, SEJ-S(0), AJ, and Type A expansion joints only.

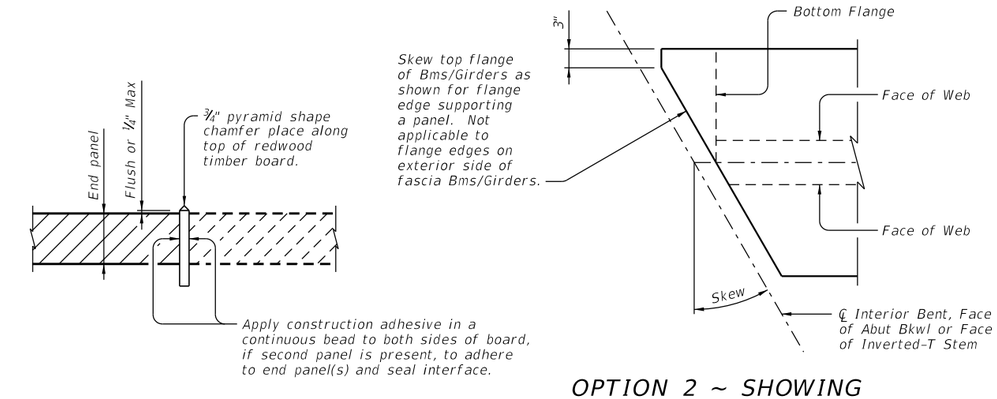

ELEVATION EXAMPLE OF END PANEL AND TIMBER BOARD (23)

See "Option 2 ~ Elevation At Beam Ends".

OPTION 2 ~ SHOWING MODIFICATION TO BEAM/GIRDER TOP FLANGE FOR SKEWS OVER 5°

Showing I-Beam/I-Girder, U-Beams and Steel Beams similar.

(6) See Span Details and Thickened Slab End Details for top slab reinforcement and clear cover. Transverse top slab reinforcement may rest on top of prestressed concrete panels if necessary to maintain clear cover.

(14) Max Spacing as listed unless otherwise shown.

(21) 1 ½" Vinyl or plastic joint former at controlled joints (Stress Cap, Zip Strip, Stress Lock, or equal as approved by the Engineer.)

(22) End panel may be set up to 2" lower to accommodate expansion joint hardware, provided bedding strip is not less than ½" thick.

(23) ¾" thick redwood timber board, leave in place. Redwood timber board placed flush with top of panel or within ¼" Max above panel. Place ¾" pyramid shape chamfer along top of timber board. See "Elevation Example of End Panel and Timber Board". Place straight, within ½" of centerline of bent or face of inverted-tee, across bridge width and end board at exterior flange edge of fascia beams/girders. Do not extend into overhang.

(24) Place panel within ½" of ¾" thick board.

(25) Permanent galvanized steel sheet form. Removable formwork is acceptable.

(26) Place end panel within ½" of expansion joint opening. End panel cannot encroach on required expansion joint opening.

(27) Place additional (#4) bar 5'-0" in length between every slab Bars T. Center (#4) bar on Joint.

(28) Place additional (#4) bar continuous 2'-6" beyond each side of Inverted-T Stem between every slab bars T.

SPECIAL OPTION 2 CONSTRUCTION NOTES:

When Option 2 is chosen bottom mat of thickened end slab reinforcing is not required. Use the same top mat as shown on the Thickened Slab End Details sheet.

Placing panels adjacent to expansion joints and bent centerlines prior to completing interior panel placement is recommended. Saw cutting panels to fit is acceptable when approved by the Engineer. Minimum distance from a saw cut edge to a panel strand is 1 ½".

Do not extend the longitudinal panel reinforcement into the cast-in-place slab.

Top flanges of beams and girders on skewed bridges must be modified as shown on this drawing. The Contractor is responsible for coordinating this modification with the beam fabricator prior to submitting shop drawings for approval.

Fabricator may optionally skew the whole end. When electing to skew whole end, girder end details and bearing type at conventional interior bent must be changed to use condition at abutment. Fabricator must coordinate change in bearing type, bearing centerline location, and dowel location with Engineer and Contractor. Show appropriate changes on girder and bearing shop drawings.

Bending of anchor studs of expansion joints shown on standards AJ, SEJ-B, SEJ-M, and SEJ-S(0) is permissible if necessary to clear top of end panels. The Contractor is responsible for coordinating modifications with the joint fabricator. Submit shop drawings for approval when modifications to expansion joint hardware are made.

Bedding strips under skewed end panels must conform to the requirements of Item 422 except their minimum compressive strength must be 60 psi.

Provide Bars AA, G, K and OA from standard IGTS in the slab.

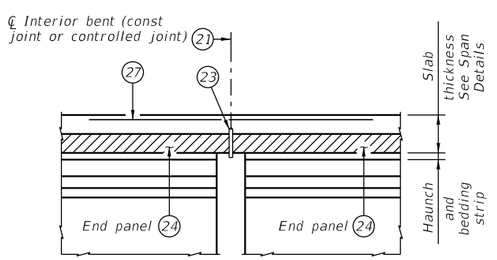

CONVENTIONAL INTERIOR BENT

Panel against panel between beams/girders.

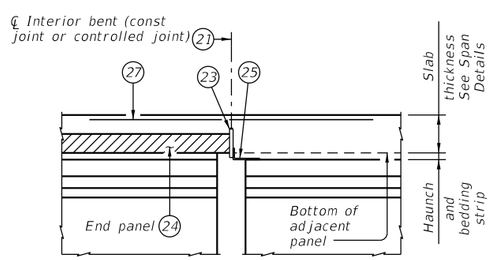

CONVENTIONAL INTERIOR BENT

Panel against beam/girder end in adjacent span.

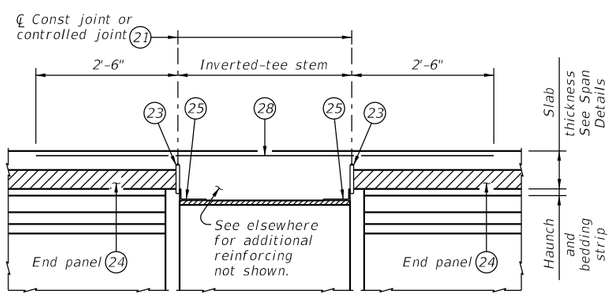

INVERTED-T BENT

Panels against inverted-tee stem

OPTION 2 ~ ELEVATIONS AT BEAM ENDS (6)

HL93 LOADING — SHEET 4 OF 4

Texas Department of Transportation — Bridge Division Standard

PRESTRESSED CONCRETE PANELS

DECK DETAILS

PCP

FILE:	DN: TxDOT	CK: TxDOT	DW: JTR	CK: JMH
©TxDOT April 2019	CONT	SECT	JOB	HIGHWAY
REVISIONS	0684	01	068	SH 550
3/2023: Removed top flange tension limit.	DIST		COUNTY	SHEET NO.
	PHARR		CAMERON	

DATE:
FILE:

Docusign Envelope ID: D24B0E46-A040-4DCF-9159-2076E4A3664D

DISCLAIMER:
The use of this standard is governed by the "Texas Engineering Practice Act". No warranty of any kind is made by TxDOT for any purpose whatsoever. TxDOT assumes no responsibility for the conversion of this standard to other formats or for incorrect results or damages resulting from its use.

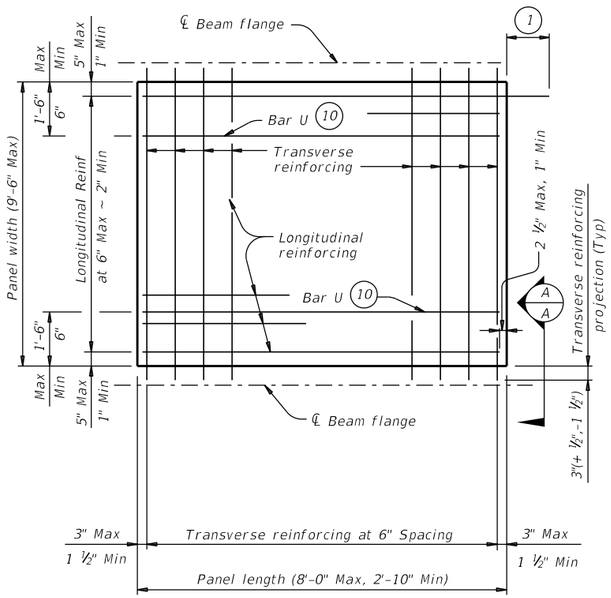

TYPICAL NON-SKEWED PANEL PLAN

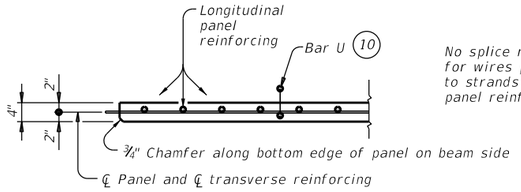

SECTION A-A

(Not showing supplemental #4 bars for skewed end panels.)

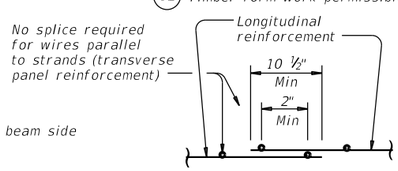

WELDED WIRE REINFORCEMENT (WWR) SPLICE DETAIL 6

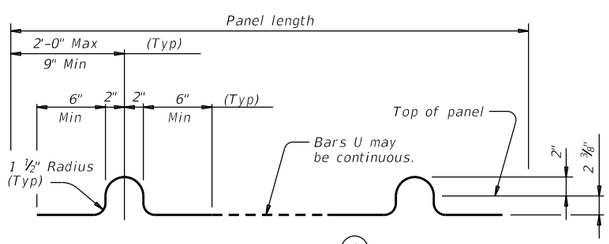

BARS U (#3) 2

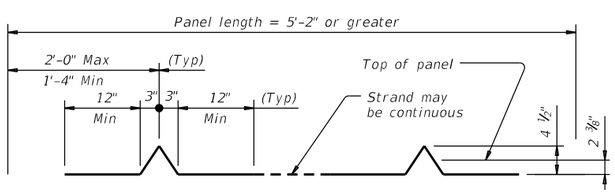

OPTIONAL STRAND FOR BARS U 3

1. At connection with cast-in-place slab, extend longitudinal panel reinforcement 1'-0" (+2",-0") past panel end. Alternatively, provide (#3) x 2'-0" dowels at 6" Max Spacing and extend dowels 1'-0" past panel end.
2. Four loops required per panel.
3. Four loops required per panel. ⅜" or ½" strands may be used.
4. Normal dimensions must be used on spans with parallel beams. Maximum and Minimum dimensions apply only to spans with flared beams.
5. See Normal Grading Detail on PCP standard for lap requirements and bedding strip dimensions. Some laps shown in tables cannot utilize all bedding strip widths.
6. One Splice allowed per panel. No more than two sheets of WWR are allowed.
7. Provide (#4) bars under transverse reinforcing, 10 Spaces at 4" = 3'-4". Omit for 5 degree (1:12) skew and smaller.
8. End Cover 2 ½" Max, 1" Min.
9. Recess strands on indicated panel edge in accordance with Item 424.
10. At the fabricator's option, Bars U may be placed parallel to transverse panel reinforcing with horizontal legs in plane of transverse panel reinforcing.
11. Use length of indicated panel edge as panel width for purpose of determining type of transverse reinforcing.
12. Timber form work permissible this edge.

Debond all strands less than 3.5' long between panel edges. For strands greater than 3.5' long, the Fabricator has the option to debond 2 or fewer strands from corner. For each debonded strand add a #4 bar.

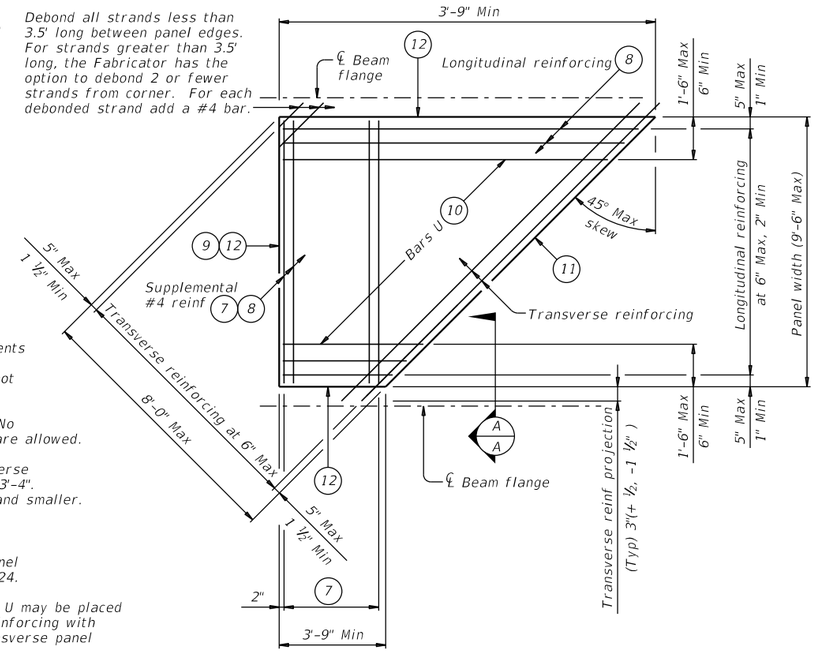

TYPICAL SKEWED END PANEL PLAN

(Only to be used with details shown elsewhere in the plans.)

TABLE A (4) (5)			
Beam Type	Normal (In.)	Min (In.)	Max (In.)
A	3	2 ½	3 ½
B	3	2 ½	3 ½
C	4	3	4 ½
IV	6	4	7 ½
VI	6 ½	4 ½"	8 ½
U40 – 54	5 ½	5 ½	7
Tx28-70	6	5	7 ½
XB20 – 40	4	3	4 ½
XSB12 – 15	4	3	4 ½

TABLE B (4) (5)			
Top Flange Width	Normal (In.)	Min (In.)	Max (In.)
11" to 12"	2 ¾	2 ½	2 ¾
Over 12" to 15"	3 ¼	3	3 ¼
Over 15" to 18"	4	3	4 ¾
Over 18"	5	3 ½	6 ¼

GENERAL NOTES:

Provide Class H concrete for panels. Release strength f'ci=3,500 psi. Minimum 28 day strength f'c=5,000 psi.

Provide ¾" chamfer along bottom edge of panel on beam side.

Do not use epoxy-coated reinforcing steel bar or strand in panels.

Remove laitance from top panel surface.

Finish top of panel to a roughness between a No. 6 and No. 9 concrete surface profile, inclusive, as specified by the International Concrete Repair Institute (ICRI).

Shop drawings for the fabrication of panels will not require the Engineer's approval if fabrication is in accordance with the details shown on this standard.

A panel layout which identifies location of each panel must be developed by the Fabricator. Permanently mark each panel in accordance with the panel layout. A copy of the layout is to be provided to the Engineer.

TRANSVERSE PANEL REINFORCEMENT:

For panel widths over 5', use ⅜" or ½" Dia (270k) prestressing strands with a tension of 14.4 kips per strand.

For panel widths over 3'-6" up to and including 5', use ⅜" or ½" Dia (270k) prestressing strands with a tension of 14.4 kip per strand. Optionally, (#4) Grade 60 reinforcing bars may be used in lieu of prestressed strands.

For panel widths up to 3'-6", use (#4) Grade 60 reinforcing bars (prestressed strands alone are not allowed).

Place transverse panel reinforcement at panel centroid and space at 6" Max.

LONGITUDINAL PANEL REINFORCEMENT:

Any of the following options may be used for longitudinal panel reinforcement:

1. (#3) Grade 60 reinforcing steel at 6" Max Spacing. No splices allowed.
2. ⅜" Dia prestressing strands at 4 ½" Max Spacing (unstressed). No splices allowed.
3. ½" Dia prestressing strands at 6" Max Spacing (unstressed). No splices allowed.
4. Deformed Welded Wire Reinforcement (WWR) (ASTM A1064) providing 0.22 sq in per foot of panel width. Wires larger than D11 not permitted. Provide transverse wires to ensure proper handling of reinforcing. One splice per panel is allowed. See WWR Splice Detail.

No combination of longitudinal reinforcement options in a panel is allowed.

Place longitudinal panel reinforcement above or below transverse panel reinforcement. Must be placed above transverse panel reinforcement for skewed end panels with supplemental (#4) reinforcement.

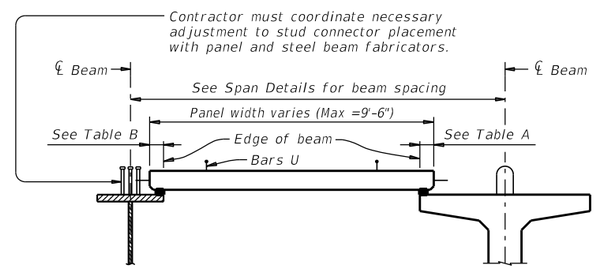

STEEL BEAMS

PRESTRESSED CONCRETE BEAMS OR GIRDERS

Typ unless noted otherwise

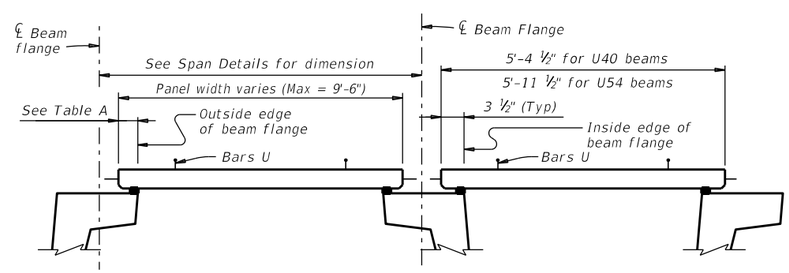

PRESTRESSED CONCRETE U-BEAMS

TYPICAL SECTIONS FOR DETERMINING PANEL WIDTH

HL93 LOADING

Texas Department of Transportation — Bridge Division Standard

PRESTRESSED CONCRETE PANEL FABRICATION DETAILS

PCP-FAB

FILE:	DN: TxDOT	CK: TxDOT	DW: JTR	CK: AES
©TxDOT April 2019	CONT	SECT	JOB	HIGHWAY
REVISIONS	0684	01	068	SH 550
	DIST	COUNTY		SHEET NO.
	PHARR	CAMERON		

DATE:
FILE:

Docusign Envelope ID: D24B0E46-A040-4DCF-9159-2076E4A3664D

DISCLAIMER:
The use of this standard is governed by the "Texas Engineering Practice Act". No warranty of any kind is made by TxDOT for any purpose whatsoever. TxDOT assumes no responsibility for the conversion of this standard to other formats or for incorrect results or damages resulting from its use.

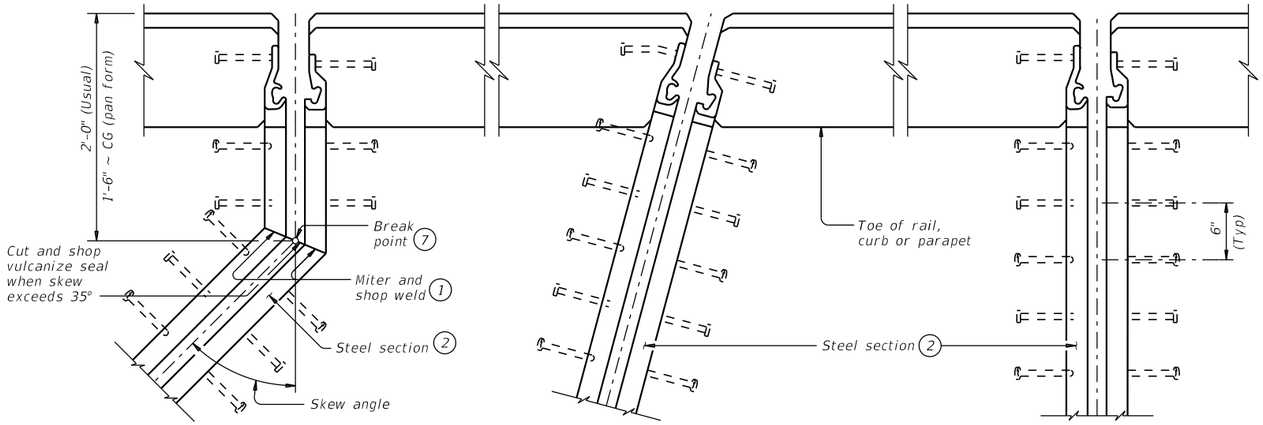

SHOWING SKEWS WITH SLAB BREAKBACKS

SHOWING SKEWS WITHOUT SLAB BREAKBACKS

SHOWING WITHOUT SKEWS AND SLAB BREAKBACKS

PLANS OF END CONDITIONS

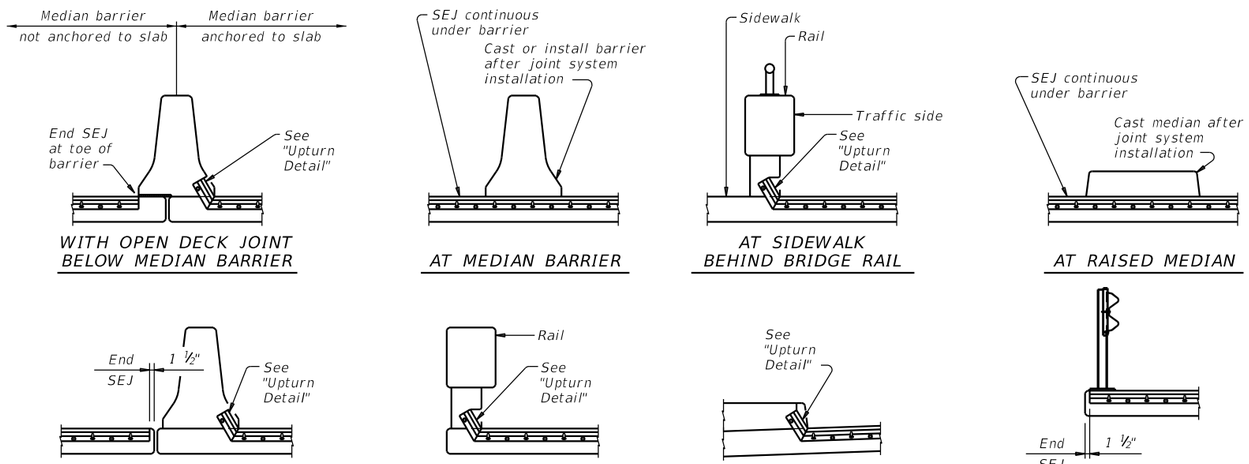

WITH OPEN DECK JOINT BELOW MEDIAN BARRIER

AT MEDIAN BARRIER

AT SIDEWALK BEHIND BRIDGE RAIL

AT RAISED MEDIAN

WITH OPEN DECK JOINT ADJACENT TO MEDIAN BARRIER

AT CONCRETE BRIDGE RAIL

AT SIDEWALK

AT STEEL POST BRIDGE RAIL

TYPICAL SECTIONS 5

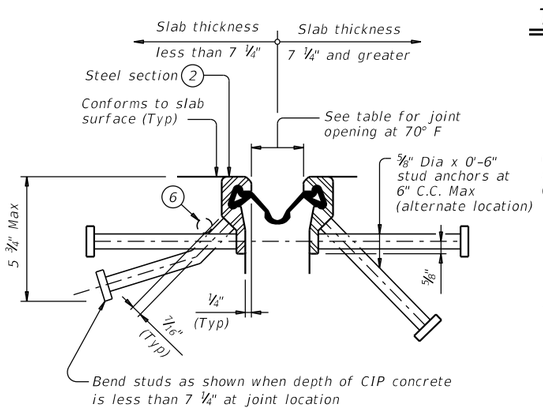

SECTION THRU WATSON BOWMAN ACME (SE-400 OR SE-500) JOINTS

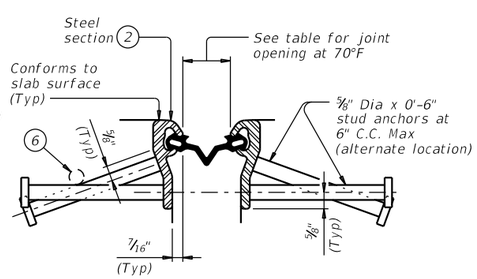

SECTION THRU D.S. BROWN (A2R-400 OR A2R-XTRA) JOINTS

TABLE OF SEALED EXPANSION JOINT INFORMATION

MANUFACTURER	STEEL SECTION 2	STRIP SEAL			
		4" JOINT		5" JOINT	
		Seal Type	Joint Opening 3	Seal Type	Joint Opening 3
D.S. Brown	Type SSCM2	A2R-400	1 ¾"	A2R-XTRA	2"
Watson Bowman Acme	Type R	SE-400	1 ¾"	SE-500	2"

REDUCED LONGITUDINAL MOVEMENT RANGE		
SKEW (deg)	JOINT SIZE	
	4"	5"
0	4.0"	5.0"
15	4.0"	5.0"
30	3.5"	4.3"
45	2.8"	3.5"

DESIGN NOTES:

Joints installed on a skew have reduced ability to accommodate longitudinal movement. Use table values to determine the correct joint size for skewed installations.

For other skews over 25 degrees, calculate reduced movement range by multiplying joint size by cosine (skew).

1. Remove all burrs which will be in contact with seal prior to making splice.
2. Shape of steel section shown is typical. Variations in sections must be approved by the Engineer.
3. These openings are also the recommended minimum installation openings.
4. Reduce for sidewalk or parapet heights less than 6".
5. Other conditions affecting the joint profile should be noted elsewhere.
6. Move transverse bars that are in conflict with SEJ studs, in either the bridge slab or approach slab, to rest at the junction of the studs.
7. See Span details for location of break point.
8. Align shipping angle perpendicular to joint.

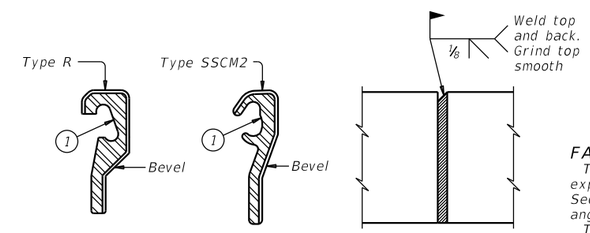

WELD LIMITS

WELD LIMITS

REAR VIEW

FIELD SPLICE DETAIL

FABRICATION NOTES:

Temporarily shop assemble corresponding sections of sealed expansion joints (SEJ), check for fit, and match mark for shipment. Secure corresponding sections together for shipment with shipping angle. Do not use erection bolts.

The seal must be continuous and included in the price bid for sealed expansion joint.

Ship steel sections in convenient lengths of 10'-0" Min and 24'-0" Max unless necessary for staged construction or widenings. One shop splice is permitted in each shipping length provided no piece is less than 2'-0" long and sufficient studs are added to limit the stud to shop splice distance to 2" Min and 4" Max.

Weld studs in accordance with AWS D1.1.

Butt weld all shop and field splices and grind smooth areas in contact with seal. Make all necessary field splice joint preparations in the shop.

Paint the entire steel section with System II or IV primer in accordance with Item 446, "Field Cleaning and Painting Steel", unless required to galvanize when shown in the plans. Provide galvanizing in accordance with Item 445, "Galvanizing". Provide paints in accordance with Item 446.2. Prepare steel and apply paint in accordance with Item 446.4.7.3 and 446.4.7.4.

Shop drawings for the fabrication of sealed expansion joints will not require the Engineer's approval if fabrication is in accordance with the details shown on this standard.

CONSTRUCTION NOTES:

Secure the sealed expansion joint in position and place to the proper grade and alignment by welding braces to adjacent reinforcing steel, to prestressed beam stirrups, or to anchors cast in concrete diaphragms. Include cost of temporary bracing in the price bid for sealed expansion joint.

Remove shipping angle immediately after each joint half is secured in place. Grind smooth, and touch up with organic zinc-rich paint.

Clean and prepare seal cavity for seal installation as per the Manufacturer's installation procedures.

GENERAL NOTES:

Provide sealed expansion joints in the size and at locations shown on the plans.

Minimum slab and overhang thickness required for the use of SEJ-M is 6 ½".

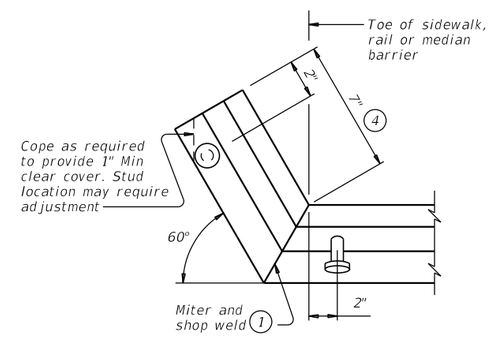

UPTURN DETAIL

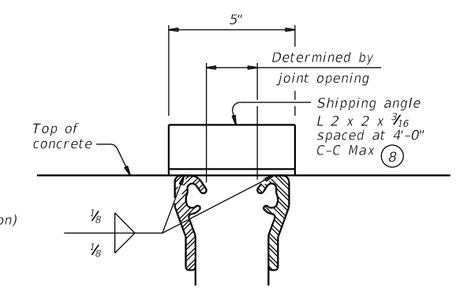

SHOWING D.S. BROWN (Ty SSCM2)

(All joints are similar.) (Studs are not shown for clarity.)

SHIPPING ANGLE

An alternate method of securing joint sections may be used if approved by the Bridge Division. Erection bolts are not allowed.

Texas Department of Transportation — Bridge Division Standard

SEALED EXPANSION JOINT TYPE M

WITHOUT OVERLAY

SEJ-M

FILE:	DN: TxDOT	CK: TxDOT	DW: JTR	CK: JMH
©TxDOT April 2019	CONT	SECT	JOB	HIGHWAY
REVISIONS	0684	01	068	SH 550
	DIST		COUNTY	SHEET NO.
	PHARR		CAMERON	

DATE:
FILE:

Docusign Envelope ID: D24B0E46-A040-4DCF-9159-2076E4A3664D

DISCLAIMER:
The use of this standard is governed by the "Texas Engineering Practice Act". No warranty of any kind is made by TxDOT for any purpose whatsoever. TxDOT assumes no responsibility for the conversion of this standard to other formats or for incorrect results or damages resulting from its use.

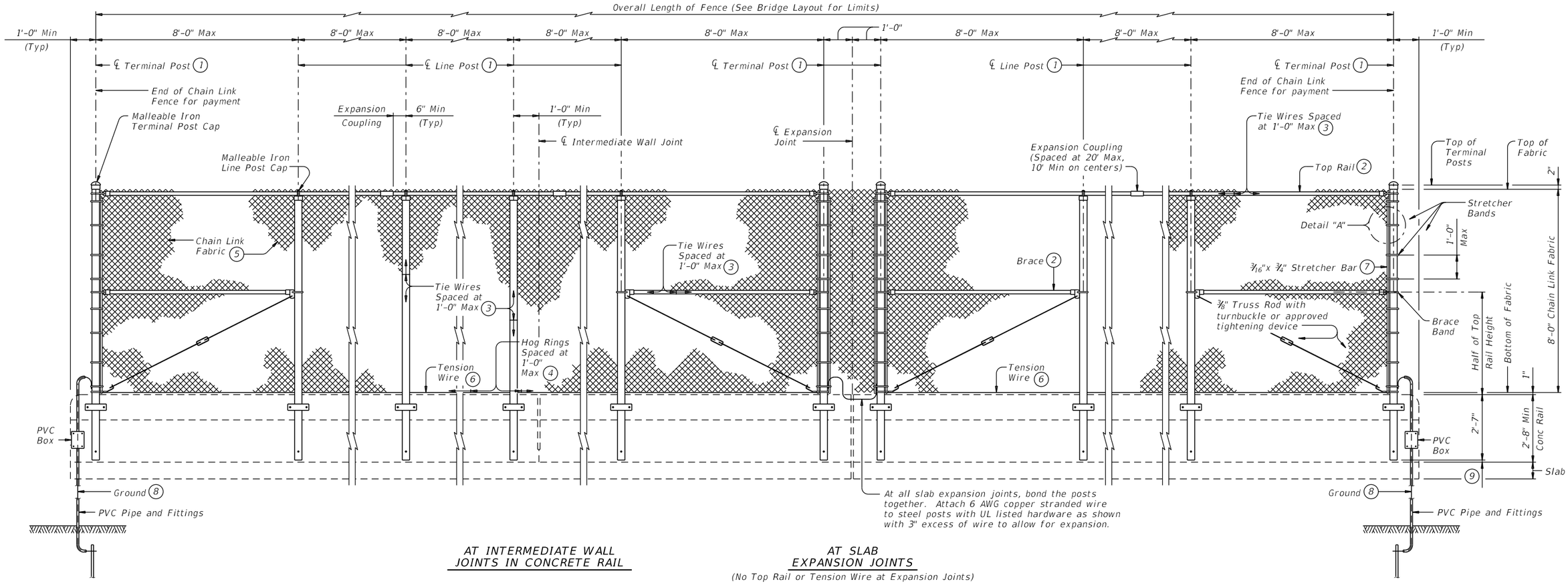

AT INTERMEDIATE WALL JOINTS IN CONCRETE RAIL

AT SLAB EXPANSION JOINTS
(No Top Rail or Tension Wire at Expansion Joints)

OUTSIDE ELEVATION OF CHAIN LINK FENCE

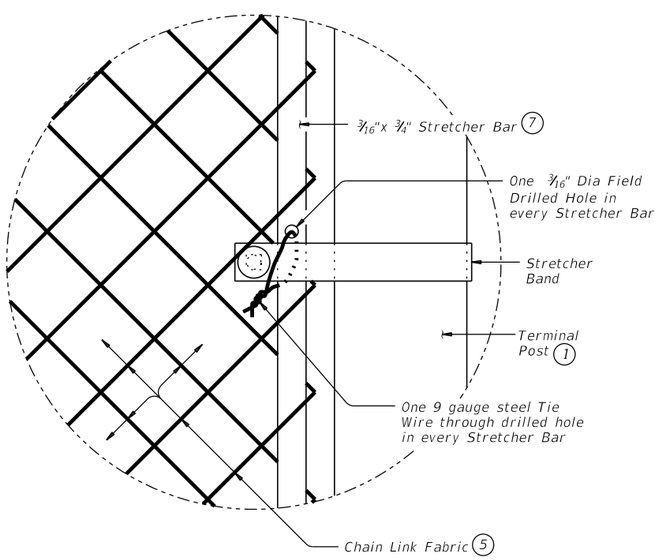

DETAIL "A"

(1) HSS 3.500 x 0.216 ASTM A1085 or A500 Gr B.

(2) HSS 1.660 x 0.140 ASTM A500 Gr B or A53 Gr B.

(3) 9 gauge steel Tie Wires attach chain link fabric to HSS.

(4) 9 gauge steel Hog Rings attach chain link fabric to tension wire.

(5) 9 gauge steel Chain Link Fabric, 2" Mesh, knuckle selvage top and bottom.

(6) 7 gauge steel Tension Wire.

(7) Contractor must field drill one 3/16" Dia hole in every stretcher bar and use a 9 gauge steel tie wire to tie one stretcher band and chain link fabric together. Locate drilled hole for tie wire at approximate mid-height of fence.

(8) Ground terminal post at the beginning and end of fence and down the nearest bent. Attach 6 AWG copper stranded wire to steel post with UL listed hardware and run other end of copper stranded wire to 5/8" Dia minimum copper-clad steel rod 8 ft in length. Install ground rod as per Item 550 and this sheet. The 6 AWG copper stranded wire must run through 1/2" Schedule 40 PVC pipe, fittings and PVC box attached to the back of rail.

(9) Dimension varies on rail types and superstructure type. T551, T221 and C221 Rails = 1" with no overlay, T222 Rail and SSTR Rail = 5" with no overlay, increased 2" for overlay. On bridges with significant beam camber variable length in dimension may be anticipated.

SHEET 1 OF 2

Texas Department of Transportation — Bridge Division Standard

8 FT CHAIN LINK FENCE FOR RAILROAD OVERPASS

CLF-RO

FILE:	DN: TxDOT	CK: TxDOT	DW: JTR	CK: JMH
©TxDOT September 2019	CONT	SECT	JOB	HIGHWAY
REVISIONS	0684	01	068	SH 550
	DIST		COUNTY	SHEET NO.
	PHARR		CAMERON	

DATE:
FILE:

Docusign Envelope ID: D24B0E46-A040-4DCF-9159-2076E4A3664D

DISCLAIMER:
The use of this standard is governed by the "Texas Engineering Practice Act". No warranty of any kind is made by TxDOT for any purpose whatsoever. TxDOT assumes no responsibility for the conversion of this standard to other formats or for incorrect results or damages resulting from its use.

(1) HSS 3.500 x 0.216 ASTM A1085 or A500 Gr B.

(5) 9 gauge steel Chain Link Fabric, 2" Mesh, knuckle selvage top and bottom.

(9) Dimension varies on rail types and superstructure type. T551, T221 and C221 Rails = 1" with no overlay, T222 Rail and SSTR Rail = 5" with no overlay, increased 2" for overlay. On bridges with significant beam camber variable length in dimension may be anticipated.

(10) See "Material Notes" for threaded anchor rod information.

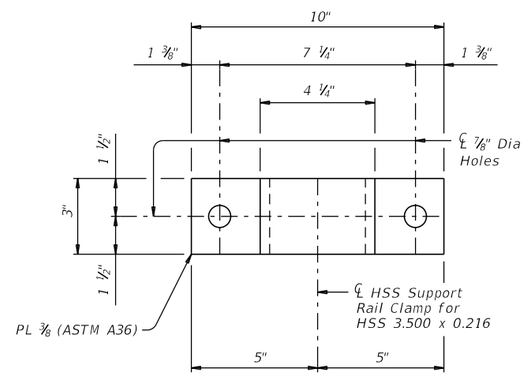

PIPE SUPPORT RAIL CLAMP ELEVATION

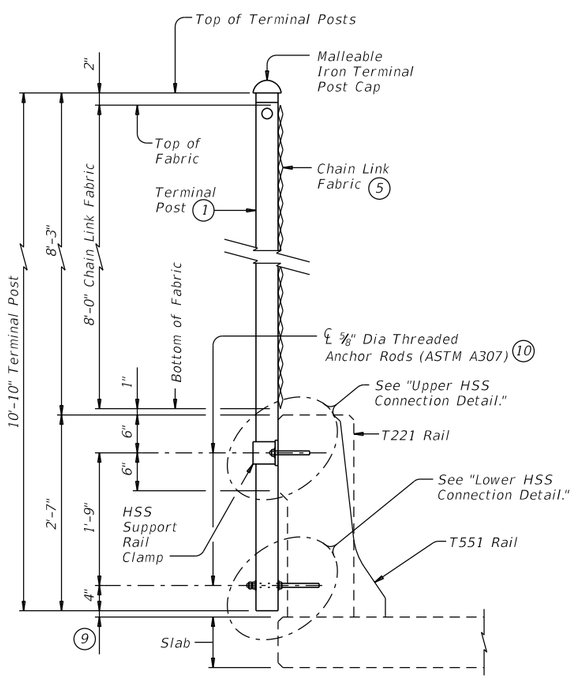

CHAIN LINK FENCE SECTION

(Showing Terminal Post on a T551 or T221 Rail, Line Post, T222 Rail and SSTR Rail similar.)

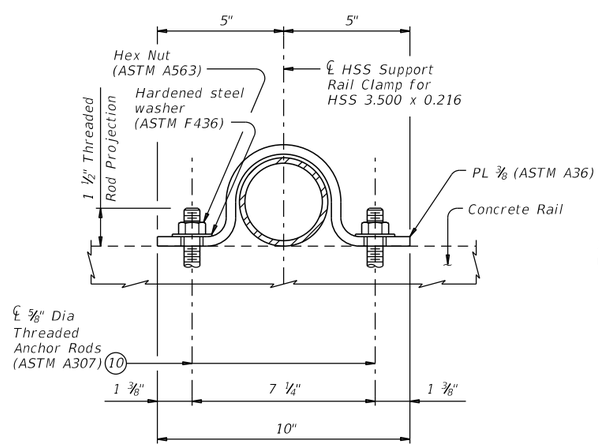

HSS SUPPORT RAIL CLAMP ASSEMBLY

UPPER HSS CONNECTION DETAIL

(Dimensions may vary according to Manufacturer's specifications.)

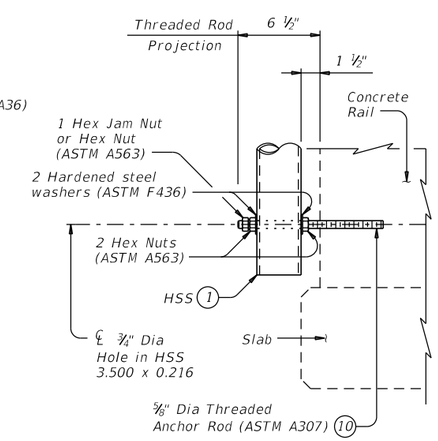

LOWER HSS CONNECTION DETAIL

(Showing Terminal Post or Line Post)

CONSTRUCTION NOTES:

Chain link fence post must be plumb unless otherwise approved.

Test adhesive anchors in accordance with Item 450.3.3, "Tests". Test 3 anchors per 100 anchors installed. Perform corrective measures to provide adequate capacity if any of the tests do not meet the required test load. Repair damage from testing as directed.

MATERIAL NOTES:

All Chain Link Fence materials must conform to standard specifications, Item "Chain Link Fence" unless shown otherwise.

Galvanize all steel components unless noted otherwise.

Provide ASTM A1085, A500 Gr B for HSS 3.500 x 0.216. Provide ASTM A500 Gr B or A53 Gr B for HSS 1.660 x 0.140.

Provide ASTM A36 for steel plates.

Anchor bolts must be 5/8" Dia ASTM A307 Gr A fully threaded rods. Hex nuts must conform to ASTM A563 requirements. Embed fully threaded rods into parapet wall with a Type III, Class C, D, E, or F anchor adhesive. Minimum adhesive anchor embedment depth is 5". Anchor adhesive chosen must be able to achieve a factored bond strength in tension of 6 kips each anchor (edge distance and anchor spacing must be accounted for). Submit signed and sealed calculations or the manufacturer's published literature showing the proposed anchor adhesive's ability to develop this load to the Engineer for approval prior to use. Anchor installation, including hole size, drilling, and clean out, must be in accordance with Item 450, "Railing".

GENERAL NOTES:

This sheet must be used with a concrete Traffic or Combination Rail. Rails that can be used with this sheet are T551, SSTR, T221, T222, and C221 Rails. Chain link fence details shown on this standard are adequate for all speeds. If used, optional side slot drains shown on rail standards must not be any closer than 6" from chain link post to edge of side slot drains.

This railing cannot be used on bridges with expansion joints providing more than 5" movement.

Payment for materials, fabrication, and installation of this assembly are to be included in unit price bid in accordance with Item 450, "Rail (CLF-RO)."

Approximate weight of fence = 20 plf.

Texas Department of Transportation — Bridge Division Standard

8 FT CHAIN LINK FENCE FOR RAILROAD OVERPASS

CLF-RO

FILE:	DN: TxDOT	CK: TxDOT	DW: JTR	CK: JMH
©TxDOT September 2019	CONT	SECT	JOB	HIGHWAY
REVISIONS	0684	01	068	SH 550
	DIST		COUNTY	SHEET NO.
	PHARR		CAMERON	

DATE:
FILE:

Docusign Envelope ID: D24B0E46-A040-4DCF-9159-2076E4A3664D

DISCLAIMER:
The use of this standard is governed by the "Texas Engineering Practice Act". No warranty of any kind is made by TxDOT for any purpose whatsoever.
TxDOT assumes no responsibility for the conversion of this standard to other formats or for incorrect results or damages resulting from its use.

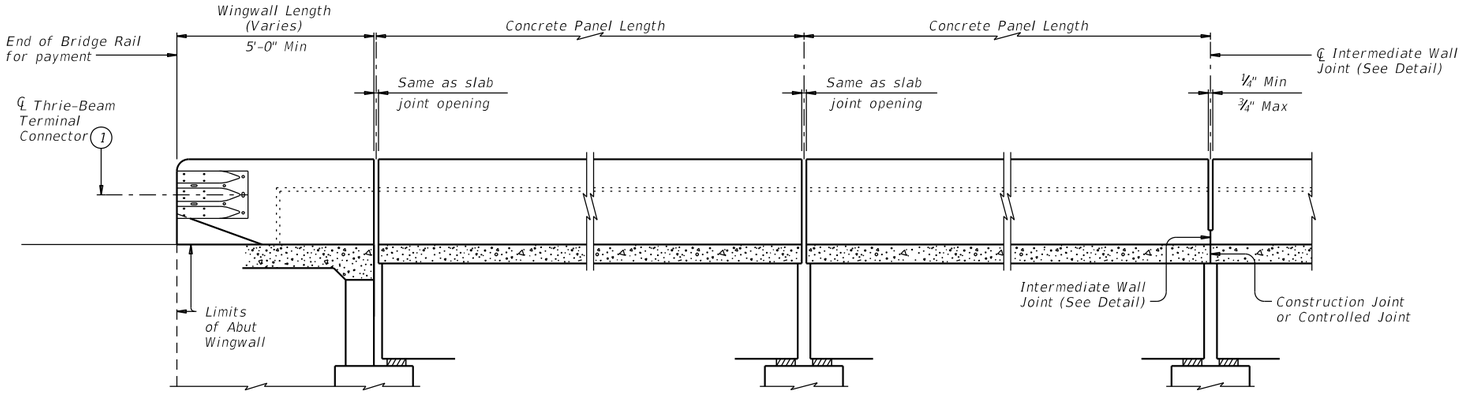

AT ABUTMENTS | AT BENTS WITH SLAB EXP JOINTS | AT BENTS WITHOUT SLAB EXP JOINTS

ROADWAY ELEVATION OF RAIL

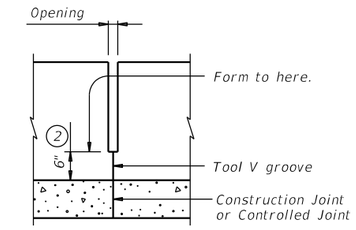

INTERMEDIATE WALL JOINT DETAIL

Provide at all interior bents without slab expansion joints.

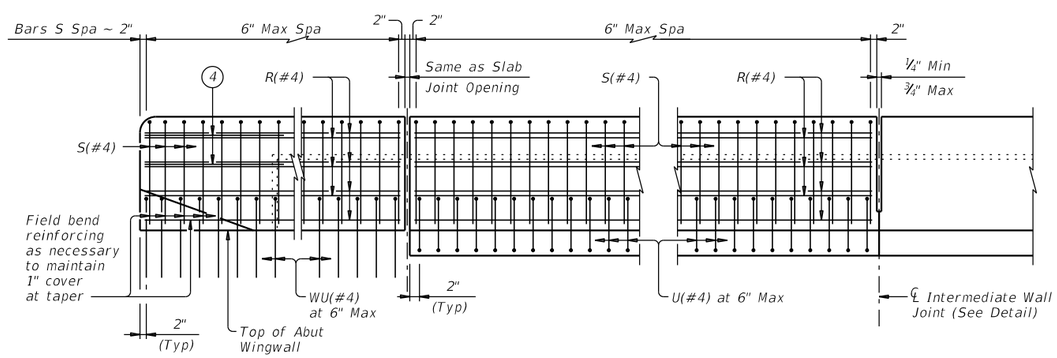

ELEVATION SHOWING TYPICAL REINFORCING PLACEMENT

℄ 5 ~ 1" Dia holes and 2 ½" Dia x 2" deep recesses. Form or core holes and recesses. Percussion drilling is not permitted. Adjust placement of reinforcing steel as necessary to avoid bolt holes and recesses. Bolt recesses are only required when pedestrian sidewalks are adjacent to back of rail. Tighten the 5 Terminal Connection Bolts in a well distributed pattern so to prevent damage or distortion of the Thrie-Beam Connection and the MBGF Transition. Cut bolts off after installation so as to extend no more than ¾" beyond nut. Paint ends of cut-off bolts with Zinc-rich paint.

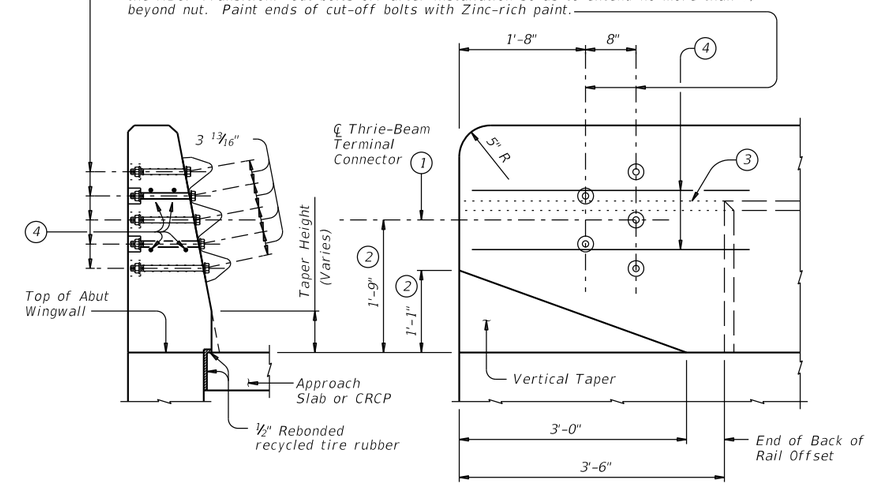

SECTION | ELEVATION

TERMINAL CONNECTION DETAILS

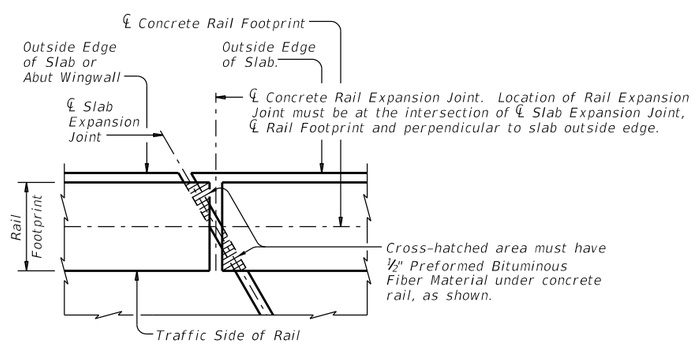

PLAN OF RAIL AT EXPANSION JOINTS

Example showing Slab Expansion Joints without breakbacks.

1. Terminal Connectors and associated hardware are to be paid for under the Item "Metal Beam Guard Fence." Attach Metal Beam Guard Fence Transitions to the bridge rail and extend along the embankment unless otherwise shown in the plans.
2. Increase 2" for structures with Overlay.
3. Back of rail offset may, with Engineer's approval, be continued to the end of the railing.
4. Place 4 additional Bars R(#4) 3'-8" in length inside Bars S(#4) and centered 2'-0" from end of rail when Terminal Connections are required.

SHEET 1 OF 2

Texas Department of Transportation | Bridge Division Standard

TRAFFIC RAIL SINGLE SLOPE

TYPE SSTR

FILE:	DN: TxDOT	CK: TxDOT	DW: JTR	CK: TxDOT
©TxDOT September 2019	CONT	SECT	JOB	HIGHWAY
REVISIONS	0684	01	068	SH 550
	DIST		COUNTY	SHEET NO.
	PHARR		CAMERON	

DATE:
FILE:

Docusign Envelope ID: D24B0E46-A040-4DCF-9159-2076E4A3664D

DISCLAIMER:
The use of this standard is governed by the "Texas Engineering Practice Act". No warranty of any kind is made by TxDOT for any purpose whatsoever. TxDOT assumes no responsibility for the conversion of this standard to other formats or for incorrect results or damages resulting from its use.

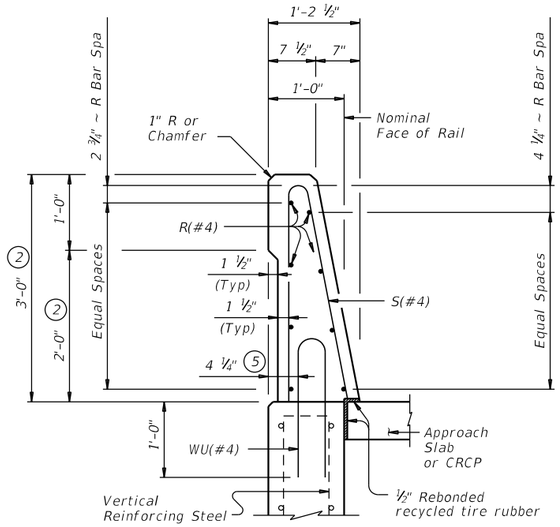

ON ABUTMENT WINGWALLS OR CIP RETAINING WALLS

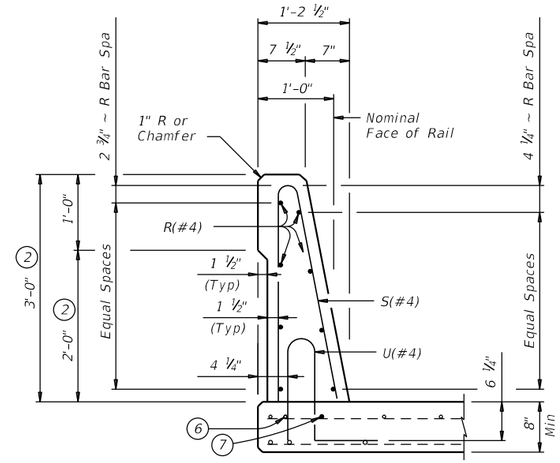

ON BRIDGE SLAB

SECTIONS THRU RAIL

(2) Increase 2" for structures with Overlay.

(5) 5 ¼" when vertical reinforcing has closer clear cover over horizontal reinforcing in abutment wingwalls or retaining walls on traffic side of wall.

(6) As an aid in supporting reinforcement, additional longitudinal bars may be used in the slab with the approval of the Engineer. Such bars must be furnished at the Contractor's expense.

(7) Top longitudinal slab bar may be adjusted laterally 3" plus or minus to tie reinforcing.

(8) No longitudinal wires may be within upper bend.

(9) Bend or cut as required to clear drain slots.

(10) Space U(#4) bars at 4" Max when end region of panel length is less than 6'-0" to side slot drain. Space U(#4) bars at 6" Max when end region of panel length is 6'-0" and greater to side slot drain.

CONSTRUCTION NOTES:

This railing may be constructed by the slipform process when approved by the Engineer, with equipment approved by the Engineer. Provide sensor control for both line and grade. Tack welding to provide bracing for slipform operations is acceptable. Welding may be performed at a minimum spacing of 3 ft between the cage and the anchorage. It is permissible to weld to bars U, WU and S at any location on the cage. If increased bracing is needed, provide additional anchorage devices and weld in the upper two thirds of the cage. Paint welded areas on epoxy coated and/or galvanized reinforcing with an organic zinc rich paint in accordance with Item 445 "Galvanizing".

If rail is slipformed, apply an heavy epoxy bead 1" behind toe of traffic side of rail to concrete deck just prior to slip forming. Provide a ⅜" width x ¼" tall heavy epoxy bead with Type III, Class C or a Type V epoxy.

The back of railing must be vertical unless otherwise shown in the plans or approved by the Engineer.

MATERIAL NOTES:

Provide Class "C" concrete. Provide Class "C" (HPC) if required elsewhere.

Provide Grade 60 reinforcing steel.

Epoxy coat or galvanize all reinforcing steel if slab bars are epoxy coated or galvanized.

Deformed Welded Wire Reinforcement (WWR) (ASTM A1064) of equal size and spacing may be substituted for Bars U and WU unless noted otherwise. Deformed WWR (ASTM A1064) may be substituted for Bars R and S, as shown. Combinations of reinforcing steel and WWR or configurations of WWR other than shown are permitted if conditions in the table are satisfied. Provide the same laps as required for reinforcing bars.

Provide bar laps, where required, as follows:

Uncoated or galvanized ~ #4 = 1'-7"
Epoxy coated ~ #4 = 2'-5"

GENERAL NOTES:

This rail has been successfully evaluated by full-scale crash test to meet MASH TL-4 criteria. This rail can be used for speeds of 50 mph and greater when a TL-3 rated guard fence transition is used. When a TL-2 rated guard fence transition is used, this rail can only be used for speeds of 45 mph and less.

Do not use this railing on bridges with expansion joints providing more than 5" movement.

Rail anchorage details shown on this standard may require modification for select structure types. See appropriate details elsewhere in plans for these modifications.

Shop drawings will not be required for this rail.

Average weight of railing with no overlay is 376 plf.

Cover dimensions are clear dimensions, unless noted otherwise.

Reinforcing bar dimensions shown are out-to-out of bar.

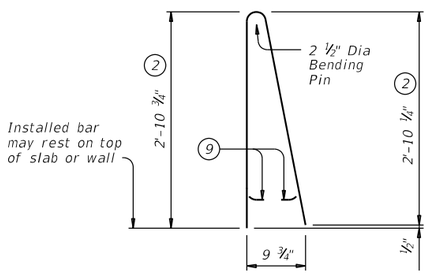

BARS S (#4)

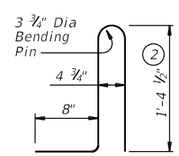

BARS U (#4)

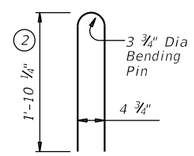

BARS WU (#4)

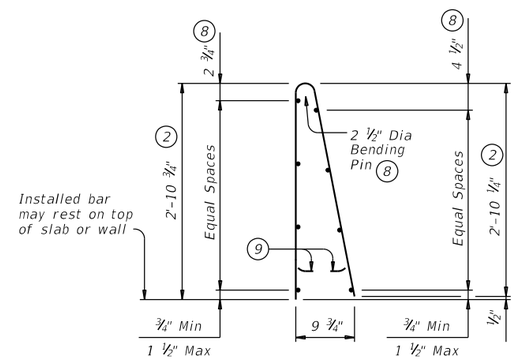

OPTIONAL WELDED WIRE REINFORCEMENT (WWR)

DESCRIPTION	LONGITUDINAL WIRES	VERTICAL WIRES
Minimum (Cumulative Total) Wire Area	1.067 Sq In.	0.267 Sq In. per Ft
	No. of Wires	Spacing
Minimum	8	4"
Maximum	10	8"
Maximum Wire Size Differential	The smaller wire must have an area of 40% or more of the larger wire.	

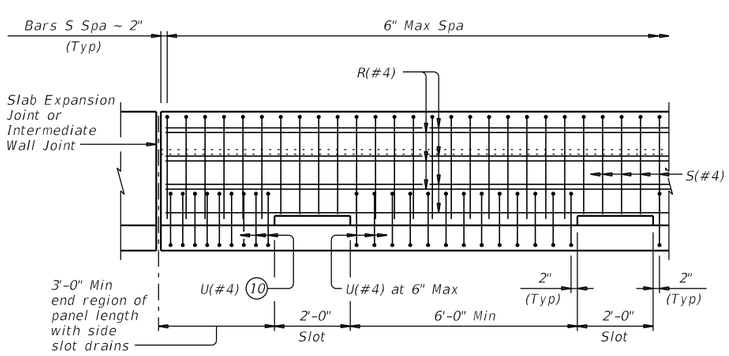

OPTIONAL SIDE SLOT DRAIN DETAIL

Note: Side Slot Drains may be used where shown elsewhere on the plans or as directed by the Engineer. Drains should not be placed over railroad tracks, lower roadways, or sidewalks. When this rail is used as a separator between a roadway surface and a sidewalk surface, side drain slots will not be permitted.

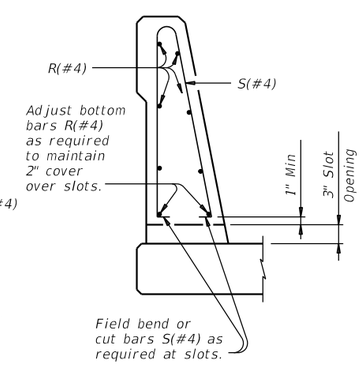

SECTION THRU OPTIONAL SIDE SLOT DRAIN

SHEET 2 OF 2

Texas Department of Transportation — Bridge Division Standard

TRAFFIC RAIL SINGLE SLOPE

TYPE SSTR

FILE:	DN: TxDOT	CK: TxDOT	DW: JTR	CK: TxDOT
©TxDOT September 2019	CONT	SECT	JOB	HIGHWAY
REVISIONS	0684	01	068	SH 550
	DIST		COUNTY	SHEET NO.
	PHARR		CAMERON	

DATE:
FILE:

Docusign Envelope ID: D24B0E46-A040-4DCF-9159-2076E4A3664D

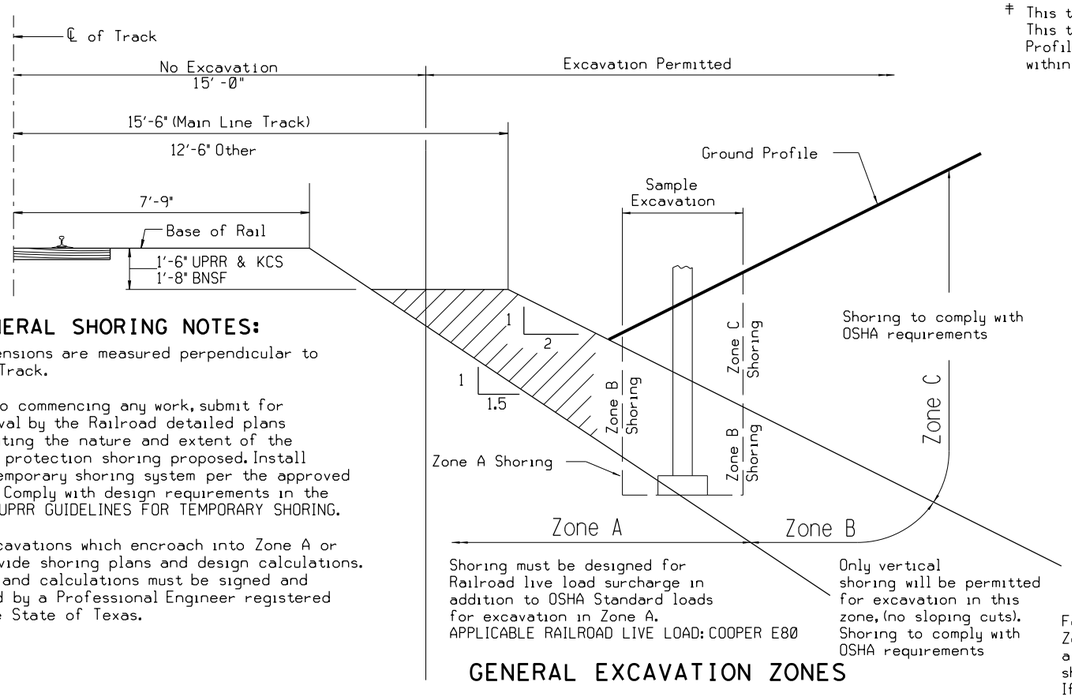

GENERAL EXCAVATION ZONES

GENERAL SHORING NOTES:

1. All dimensions are measured perpendicular to ℄ of Track.
2. Prior to commencing any work, submit for approval by the Railroad detailed plans indicating the nature and extent of the track protection shoring proposed. Install the temporary shoring system per the approved plans. Comply with design requirements in the BNSF/UPRR GUIDELINES FOR TEMPORARY SHORING.
3. For excavations which encroach into Zone A or B, provide shoring plans and design calculations. Plans and calculations must be signed and sealed by a Professional Engineer registered in the State of Texas.

For shoring/excavations in Zone A or B, TxDOT requires a predesigned and approved shoring design in the PS&E. If this is the case no Contractor submittal is required.

‡ This table is primarily required for overpass projects. This table is not required for underpass projects if the provided Plan and Profile sheets indicate this information at a minimum of every 100 ft and within bounds including 1500 ft before and after the limits of trackwork.

TABLE OF TOP OF RAIL PROFILE ‡

(STATIONS INCREASE WITH MILEPOST INCREASE)

	MAIN LINE	
	ALIGNMENT: 100' STATIONS	HIGH (LEFT) RAIL ELEVATION
400' PRIOR TO PROJECT	5+00	17.03'
	6+00	16.89'
	7+00	16.79'
	8+00	16.67'
WITHIN PROJECT	9+00	16.61'
	⬓ 10+00	16.56'
	11+00	16.51'
500' PRIOR TO PROJECT	12+00	16.42'
	13+00	16.43'
	14+00	16.45'
	15+00	16.46'
	16+00	16.43'

⬓ ± EXISTING TRACK STA. 10+00
= + CONSTRUCTION STA. 1262+98.45

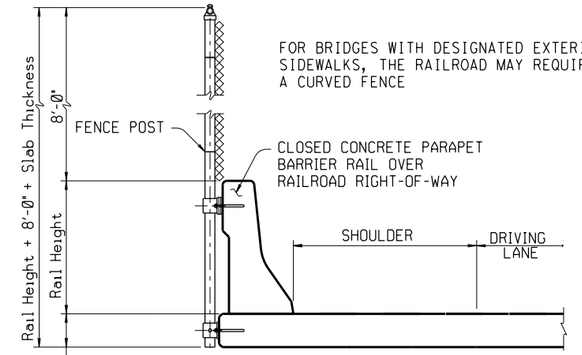

TYPICAL FENCE ON BARRIER DETAIL

ONLY REQUIRED ON OVERPASSES IF SHOWN ON BRIDGE LAYOUT. (AREAS WITH PEDESTRIANS ON BRIDGE, RAIL YARDS, OR HISTORY OF VANDALISM)

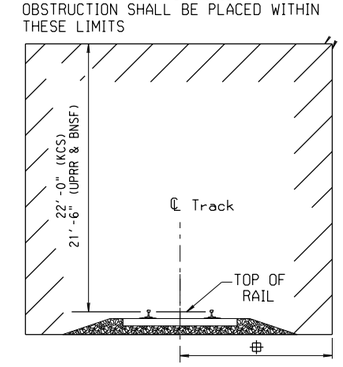

MINIMUM CONSTRUCTION CLEARANCE ENVELOPE

(NORMAL TO RAILROAD)
15'-0" (UPRR), (BNSF) and 14'-0" (KCS)

GENERAL SHORING REQUIREMENTS ‡

RAILROAD GENERAL NOTES:

1. **COORDINATION:** Use the Union Pacific Railroad Public Projects Manual as a guide for assisting in administering, coordinating, planning, and implementing your project.
2. **DESIGN REVIEW:** Prior to construction, obtain Railroad review and approval of all relevant construction items, including but not limited to, shoring, track & ground monitoring, erection, demolition, and falsework. All designs must adhere to the most restrictive provisions of the current UPRR and AREMA standards and guidelines in effect at the time the work is executed. Allow a minimum of 4 weeks for review and approval of each submittal. For submittals not in accordance with these notes, longer review times shall be expected.
3. **OPERATIONS:** Projects shall be designed such that all construction activities and phasing will not compromise safety nor impact Railroad operations.
4. **PASSING TRAINS:** Railroad requirements do not allow work within 50 feet of track centerline when a train passes the work site and all personnel must clear the area within 25 feet of the track centerline and secure all equipment.
5. **WORK WINDOWS:** Construction activities must be performed within naturally occurring track windows. Coordinate all requests for construction work windows with the Railroad's Designated Representative to ensure that the work is scheduled to eliminate any potential disruption to the Railroad's operations.
6. **TOP OF RAIL SURVEY:** Verify the elevation of the existing top-of-rail profile before starting construction. Top-of-rail survey shall be performed for 1000 feet on either side of proposed overhead structure. Additional vertical clearance may be required for adjustment of sag in vertical curve, future track raise, flood considerations, construction and maintenance purposes. Bring all discrepancies to the attention of the Railroad prior to construction.
7. **TEMPORARY CONSTRUCTION CLEARANCES:** Construction activities are not allowed within the temporary construction clearance envelope per the current UPRR Guidelines for Railroad Grade Separation Projects and Guidelines for Temporary Shoring.
8. **PERMANENT CLEARANCE ENVELOPE:** The minimum permanent vertical clearance shall be 23'-4" measured from top of highest rail to the lowest obstruction under the structure. The extent of this vertical clearance shall be a minimum of 9 feet to the field side of the outermost existing or future tracks, measured perpendicular from the centerline of said tracks. In curved track, 9 feet shall be increased either 6 inches total or 1.5 inches for every degree of curve, whichever is greater. The permanent vertical clearance shall extend to cover all existing and future tracks, including the space in between.
9. **VERIFY PERMANENT CLEARANCES:** All permanent clearances shall be verified throughout construction. A compliance report shall be submitted to the Railroad before project closing. All discrepancies shall be brought tothe attention of the Railroad.
10. **PERMANENT CLEARANCES FOR BID:** The permanent vertical and horizontal design clearances, which are specified in the bid documents approved by the Railroad, must be maintained in relation to the top-of-rail and centerline of existing and future tracks, respectively. Any reduction of these clearances is not permitted.
11. **DRAINAGE:** The proposed project shall not increase the quantity and/or characteristics of the flow in the Railroad's ditches and/or drainage structures.
12. **BEFORE YOU DIG:** Appropriate measures for the location and protection of UPRR facilities shall be addressed in the plans and contract documents. For specific Railroad requirements and additional information refer to www.up.com/cbud. Abandonment of utilities must follow the UPRR Guidelines For Abandonment of Subsurface Utility Structures.

FOR THE FOLLOWING INFORMATION PLEASE REFER TO THE PLAN AND ELEVATION DRAWINGS OF THE BRIDGE PLANS. THE PLAN AND ELEVATION DRAWINGS SHALL SHOW ALL REQUIRED INFORMATION PER BNSF/UPRR GUIDELINES FOR RAILROAD GRADE SEPARATION PROJECT PLAN NO. 711100 SHEET 2.

1. Centerline of bridge and/or centerline of project.
2. Track layout and limits of Railroad right of way with respect to centerline of main lines.
3. Future tracks, access roadways and existing tracks as main line, siding, spur, etc.
4. Point of minumum vertical clearance and distance, Measured perpendicular, from the centerline of nearest track.
5. Horizontal clearance at right angle from centerline of nearest existing or future track to the face of obstruction such as substructure above grade.
6. Horizontal clearance at right angle from centerline of nearest existing or future track to the face of nearest foundation below grade.
7. Horizontal spacing at right angle between centerlines of existing and/or future tracks.
8. Limits of shoring and minimum distance at right angle from centerline of nearest track.
9. All existing facilities and utilities and their proposed relocation, if required.
10. Toe of riprap or earth slope and/or limits of retaining wall.
11. Existing and proposed contours. (not required if the existing groundlines or drainage characteristics in Railroad ROW will not be altered).
12. Railroad Milepost and direction of increasing Milepost.
13. Direction of flow for all drainage systems within project limits.
14. Limits of barrier rail and fence with respect to centerline of track.
15. Depth of foundation below bottom of tie. (for footings only)
16. Top and bottom of pier protection wall elevation relative to top of rail elevation.
17. Controlling dimensions of drainage ditches and/or drainage structures.
18. Top of rail elevations for all tracks.
19. Minimum permanent vertical clearance above top of high rail to the lowest point under the bridge.
20. Existing and proposed groundline & roadway profile.
21. Type of riprap slope paving.
22. Location of deck drains.
23. Total width of superstructure.
24. Width of shoulder and/or sidewalk.

GENERAL NOTES:

Design and Construction for Railroad Projects shall be in accordance with the AREMA Manual for Railway Engineering and BNSF/UPRR Guidelines for Railroad Grade Separation Projects or Kansas City Southern Guidelines for the Design and Construction of Overpasses and Underpasses, or DART Light Rail Project Design Criteria Manual, and the TxDOT Standard Specifications for Construction and Maintenance of Highways, Streets and Bridges AS APPLICABLE TO THE RAILROAD COMPANY INVOLVED.

See BNSF/UPRR Guidelines for Grade Seperation Projects Plan No. 711100 and TxDOT Railroad Fence Details Sheet for additional information. A curved top fence extending 8'-0" above top of sidewalk is acceptable only where there is a traffic rail between roadway and sidewalk.

See Kansas City Southern Guidelines for the Design and Construction of Overpasses and Underpasses for corresponding BNSF/UPRR sheets referenced.

SHEET 1 OF 3

THIS DOCUMENT IS FOR INTERIM REVIEW AND NOT INTENDED FOR CONSTRUCTION, BIDDING, OR PERMIT PURPOSES.

JORGE A. MADRIGAL
P.E. 97243
5/18/2023
DATE

Texas Department of Transportation — Rail Division

RAILROAD REQUIREMENTS FOR BRIDGE CONSTRUCTION

FILE:	DN: TxDOT	CK: TxDOT	DW: TxDOT	CK: TxDOT
© TxDOT October 2014	CONT	SECT	JOB	HIGHWAY
REVISIONS March 2020	0684	01	068	SH550
	DIST		COUNTY	SHEET NO.
	21		CAMERON	265

DATE:
FILE:

Docusign Envelope ID: D24B0E46-A040-4DCF-9159-2076E4A3664D

PART 1 - GENERAL

1.01 DESCRIPTION

This project includes construction work within the right of way and/or properties of the Railroad Company and adjacent to its tracks, wire lines and other facilities. These sheets describe the minimum special requirements for coordination with the Railroad when working upon, over or under Railroad Right of Way or when impacting current or future railroad operations. Coordinate with the Railroad while performing the work outlined herein, and afford the same cooperation with the Railroad as with TxDOT. Complete all submittals and work in accordance with TxDOT Standard Specifications, Railroad Guidelines and AREMA recommendations as modified by these minimum special requirements or as directed in writing by the Railroad Designated Representative.

For purposes of this project, the Railroad Designated Representative is the person or persons designated by the Railroad Manager of Industry and Public Projects to handle specific tasks related to the project.

1.02 REQUEST FOR INFORMATION / CLARIFICATION

Submit Requests for Information ("RFI") involving work within any Railroad Right of Way to the TxDOT Engineer. The TxDOT Engineer will submit the RFI to the Railroad Designated Representative for review and approval for RFI's corresponding to work within Railroad Right of Way. Allow six (6) weeks total time for review and approval, which includes four (4) weeks for review and approval by the Railroad.

1.03 PLANS / SPECIFICATIONS

TxDOT has received written Railroad approval of the plans and specifications for this project. Any revisions or changes in the plans after award of the Contract must have the approval of TxDOT and the Railroad.

PART 2 - UTILITIES AND FIBER OPTIC

Construct all utility installations in accordance with current AREMA recommendations, Railroad, TxDOT and owning utility specifications and requirements. Railroad general guidelines can be found on the Railroad's website or by contacting the Railroad Designated Representative.

PART 3 - CONSTRUCTION

3.01 GENERAL

A. Perform all work in compliance with all applicable Railroad, FRA (Federal Railway Administration) and TxDOT rules and regulations. Arrange and conduct work in a manner that does not endanger or interfere with the safe operation of the tracks and property of the Railroad and the traffic moving on such tracks, or the wires, signals and other property of the Railroad, its tenants or licensees, at or in the vicinity of the Work. The safe operation of Railroad's train movements takes precedence over any work to be performed by the Contractor. The Contractor is responsible for train delay cost and lost revenue claims due to any delays or interruption of train operations resulting from Contractor's construction or other activities.

B. Construction activities within 15 feet of the operational tracks will only be allowed if absolutely necessary and the Railroad's Designated Representative grants approval. Construction activities within 15 feet of the operational track(s) preferably allow the tracks to stay operational. In such cases, coordination and approval by the Railroad Track Manager is required with regard to schedule, flagging, and slow orders. See Sections 3.07 and 3.08 for additional information.

C. Provide track protection for all work equipment (including rubber tired equipment) operating within 25 feet from nearest rail. When not in use, keep Contractor's machinery and materials at least 50 feet from the Railroad's nearest track.

D. Vehicular crossings of railroad track are allowed only at existing crossings, or haul road crossings developed with railroad approval.

E. The Contractor is also advised that new railroad facilities within the project may be built by the Railroad. If applicable, these facilities are delineated in the plans. Be aware of the limits of responsibilities and coordinate efforts with the Railroad and TxDOT.

3.02 RAILROAD OPERATIONS

A. Trains and/or equipment are expected on any track, at any time, in either direction. Become familiar with the train schedules in this location and structure bid assuming intermittent track windows in this period, as defined in Paragraph B that follows.

B. All railroad tracks within and adjacent to the contract site are active, and rail traffic over these facilities shall be maintained throughout the Project. Activities may include both through moves and switching moves to local customers. Railroad traffic and operations will occur continuously throughout the day and night on these tracks and shall be maintained at all times as defined herein. Coordinate and schedule the work so that construction activities do not interfere with railroad operations.

C. Coordinate work windows with TxDOT and the Railroad's Designated Representative. Types of work windows include Conditional Work Windows and Absolute Work Windows, as defined below:

1. Conditional Work Window: A Conditional Work Window is a period of time that railroad operations have priority over construction activities. When construction activities may occur on and/or adjacent to the railroad tracks within 25 feet of the nearest track, a railroad flag person will be required. At the direction of the Railroad's flag person, upon approach of a train, and when trains are present on the tracks, the tracks must be cleared (i.e., no construction equipment, materials or personnel within 25 feet, or as directed by the Railroad Designated Representative, from the tracks). Conditional Work Windows are available for the Project.

2. Absolute Work Window: An Absolute Work Window is a period of time that construction activities are given priority over railroad operations. During this time frame, the designated railroad track(s) will be inactive for train movements and may be fouled by the Contractor. At the end of an Absolute Work Window, the railroad tracks and/or signals must be completely operational for train operations and all Railroad, Public Utilities Commission (PUC) and FRA requirements, codes and regulations for operational tracks must be satisfied. In the situation where the operating tracks and/or signals have been affected, the Railroad will perform inspections of the work prior to placing that track back into service. A railroad flag person will be required for construction activities requiring an Absolute Work Window. Absolute Work Windows will not generally be granted. Any request will require a detailed explanation for Railroad review.

3.03 RIGHT OF ENTRY, ADVANCE NOTICE AND WORK STOPPAGES

A. Do not perform any work within Railroad Right of Way without a valid executed Right of Entry Agreement if required on this project.

B. Give advance notice to the Railroad as required in the "Contractor's Right of Entry Agreement" before commencing work in connection with construction upon or over Railroad Right of Way and observe the Railroad's rules and regulations with respect thereto.

C. Perform all work upon Railroad Right of Way in a manner to avoid interference with or endanger the operations of the Railroad. Whenever work may affect the operations or safety of trains, submit the work method to the Railroad Designated Representative for approval. Approval does not relieve the Contractor from liability. Do not commence any work which requires flagging service or inspection service until the flagging protection required by the Railroad is available at the job site. See Section 3.18 for railroad flagging requirements.

D. Make requests in writing for both Absolute and Conditional Work Windows, at least 30 days in advance of any work. Include in the written request:
1. Exactly what the work entails.
2. The days and hours that work will be performed.
3. The exact location of work, and proximity to the tracks.
4. The type of window requested and the amount of time requested.
5. The designated contact person.

Provide a written confirmation notice to the Railroad at least 48 hours before commencing work in connection with approved work windows when work is within 25 feet of nearest rail. Perform all work in accordance with previously approved work plans.

E. Make provisions to protect operations and property of the Railroad should a condition arising from, or in connection with the work, require immediate and unusual action. If in the judgment of the Railroad Designated Representative such provisions are insufficient, the Railroad Designated Representative may require or provide such provisions as deemed necessary. In any event, such provisions shall be at the Contractor's expense and without cost to the Railroad or TxDOT. The Railroad or TxDOT shall have the right to order the Contractor to temporarily cease operations in the event of an emergency or, if in the opinion of the Railroad Designated Representative, the Contractor's operations could endanger railroad operations. In the event of such an order, immediately notify TxDOT of the order.

3.04 INSURANCE

Do not begin work upon or over Railroad Right of Way until furnishing the Railroad with the insurance policies, binders, certificates and endorsements required by the "Contractor's Right of Entry Agreement", and until the Railroad Designated Representative has advised TxDOT that such insurance is in accordance with the Agreement.

3.05 RAILROAD SAFETY ORIENTATION

A. Complete the Railroad's course "Orientation for Contractor's Safety", and maintain current registration prior to working on the Railroad's property. This course is required to be completed annually by Contractor and Subcontractor personnel working on site.

"UPRR, BNSF, KCS/TEXMEX will not accept on-track safety training certificates from other Railroads. Refer to each Railroad's specific contractor right of entry for training information."

B. Know and follow the "Contractor's Right of Entry Agreement" EXHIBIT D, MINIMUM SAFETY REQUIREMENTS regarding clothing, personal protective equipment, and general safety requirements.

3.06 COOPERATION

The Railroad will cooperate with Contractor so that work may be conducted in an efficient manner, and will cooperate with Contractor in enabling use of Railroad Right of Way in performing the work.

3.07 MINIMUM CONSTRUCTION CLEARANCES FOR FALSEWORK AND OTHER TEMPORARY STRUCTURES

Abide by the following minimum temporary clearances during the course of construction:
A. 15' - 0" (BNSF)(UPRR), and 14' - 0" (KCS) horizontal from centerline of track
B. 22' - 0" (KCS) and 21' - 6" (UPRR & BNSF) vertically above top of rail.

For construction clearance less than listed above, obtain local Railroad Operating Unit review and approval.

3.08 APPROVAL OF REDUCED CLEARANCES

A. Maintain minimum track clearances during construction as specified in Section 3.07.

B. Submit any proposed infringement on the specified minimum clearances to the Railroad Designated Representative through TxDOT at least 30 days in advance of the work. Do not proceed with such infringement without written approval by the Railroad Designated Representative.

C. Do not commence work involving an approved infringement until receiving written assurance from the Railroad Designated Representative that arrangements have been made for any necessary flagging service.

Texas Department of Transportation — Rail Division

RAILROAD REQUIREMENTS FOR
FOR BRIDGE CONSTRUCTION

FILE:	DN: TxDOT	CK: TxDOT	DW: TxDOT	CK: TxDOT
© TxDOT October 2014	CONT	SECT	JOB	HIGHWAY
REVISIONS March 2020	0684	01	068	SH550
	DIST	COUNTY		SHEET NO.
	21	CAMERON		266

RAILROAD REQUIREMENTS FOR BRIDGE CONSTRUCTION.dgn

DATE:
FILE:

Docusign Envelope ID: D24B0E46-A040-4DCF-9159-2076E4A3664D

3.09 CONSTRUCTION AND AS-BUILT SUBMITTALS

A. Provide TxDOT submittals for construction materials and procedures as outlined below and indicated in TxDOT Standard Specifications. A summary of most TxDOT submittal requirements can be found at: www.dot.state.tx.us/publications/bridge/items reviewed.pdf

B. The tables below provide the Railroad's minimum submittal requirements for the construction items noted. Submittal requirements are in addition to those specified elsewhere in these bid documents. The review times indicated below represent the total time, including the Railroad's required four (4) weeks.

C. TxDOT will forward relevant submittals to the Railroad Manager of Industry and Public Projects unless otherwise directed by the Railroad. TxDOT and the Engineer of Record will review and include comments prior to forwarding to the Railroad. Submit items in Table 1 for both railroad overpass and underpass projects, as applicable. Submit items in Table 2 for railroad underpass projects only.

TABLE 1 - RAILROAD SUBMITTAL REQUIREMENTS FOR OVERPASS & UNDERPASS PROJECTS

ITEM	DESCRIPTION	SETS	REVIEW TIME
1	Shoring design and details	6	6 weeks
2	Falsework design and details	6	6 weeks
3	Drainage design provisions	6	6 weeks
4	Erection diagrams and sequence	6	6 weeks
5	Demolition diagram and sequence	6	6 weeks

TABLE 2 - RAILROAD SUBMITTAL REQUIREMENTS FOR UNDERPASS PROJECTS

ITEM	DESCRIPTION	SETS	NOTES	REVIEW TIME
1	Shop drawings	6	Steel and Concrete members	6 weeks
2	Bearings	6	For all structures	6 weeks
3	Concrete Mix Designs	6	For all structures	6 weeks
4	Rebar & Strand certifications	6	For superstructure only	6 weeks
5	28 day concrete strength	6	For superstructure only	6 weeks
6	Waterproofing material certifications and installation procedure	6	Waterproofing & protective boards	6 weeks
7	Structural steel certifications	6	All fracture critical members & other members requiring improved notch toughness	6 weeks
8	Fabrication and Test reports	6	All fracture critical members & other members requiring improved notch toughness	6 weeks
9	Welding Procedures and Welder Certification	6	AWS requirements	6 weeks
10	Foundation Construction Reports or Notes	6	Pile driving, drilled shaft construction, bearing pressure test reports for spread footings	6 weeks
11	Compaction testing reports for backfill at abutments	6	Must meet 95% maximum dry density, Modified Procter ASTM D1557	6 weeks

D. TxDOT shall submit As-Built Records to the Railroad when TxDOT has processed the final project plans. These records shall consist of the following items:

Overpass Projects

1. Electronic files of all structure design drawings with as constructed modifications shown, in Microstation J or Acrobat .PDF format.
2. Hard copies of all structure design drawings with as constructed modifications shown.

Underpass Projects

1. Electronic files of all structure design drawings with as constructed modifications shown, in Microstation J or Acrobat .PDF format.
2. Hard copies of all structure design drawings with as constructed modifications shown.
3. Final approved copies of shop drawings for concrete and steel members.
4. Foundation Construction Reports
5. Compaction testing reports for backfill at abutments

3.10 APPROVAL OF DETAILS

Submit details of the construction affecting Railroad's tracks and property not already included in the Contract Plans to the Railroad Designated Representative through TxDOT for the Railroad's review and written approval before such work is undertaken. Allow a total six (6) weeks for review and approval of these submittals, which includes the Railroad's four (4) week review time.

3.11 MAINTENANCE OF RAILROAD FACILITIES

A. Maintain all ditches and drainage structures free of silt or other obstructions resulting from Contractor's operations. Repair eroded areas and any other damage within Railroad Right of Way and repair any other damage to the property of the Railroad, or its tenants.

B. Perform all such maintenance and repair of damages due to the Contractor's operations at Contractor's expense.

C. Submit a proposed method of erosion control for review by the Railroad prior to beginning any grading on the Project Site. Comply with all applicable local, state and federal regulations when developing and implementing such erosion control.

3.12 SITE INSPECTIONS BY RAILROAD's DESIGNATED REPRESENTATIVE

A. In addition to the office reviews of construction submittals, site inspections may be performed by the Railroad Designated Representative at significant points during construction, including the following if applicable:
1. Pre-construction meetings.
2. Pile driving/drilling of caissons or drilled shafts.
3. Reinforcement and concrete placement for railroad bridge substructure and/or superstructure.
4. Erection of precast concrete or steel bridge superstructure.
5. Placement of waterproofing (prior to placing ballast on bridge deck).
6. Completion of the bridge structure.

B. Site inspection is not limited to the milestone events listed above. Site visits to check progress of the work may be performed at any time throughout the construction as deemed necessary by the Railroad.

C. Provide a detailed construction schedule, including the proposed temporary horizontal and vertical clearances and construction sequence for all work to TxDOT for submittal to the Railroad Designated Representative for review prior to commencement of work. Include the anticipated dates when the above listed events will occur. Update this schedule for the above listed events as necessary and each month at a minimum to allow the Railroad to schedule site inspections.

3.13 RAILROAD REPRESENTATIVES

Railroad representatives, conductors, flag person or watch person will be provided by the Railroad, at expense of TxDOT, to protect Railroad's facilities, property and movements of its trains or engines. In general, the Railroad will furnish such personnel or other protective services as follows:

A. When any part of any equipment is standing or being operated within 25 feet, measured horizontally, from nearest rail of any track on which trains may operate, or when any object is off the ground and any dimension thereof could extend inside the 25 foot limit, or when any erection or construction activities are in progress within such limits, regardless of elevation above or below track.

B. For any excavation below elevation of track subgrade if, in the opinion of the Railroad Designated Representative, track or other railroad facilities may be subject to settlement or movement.

C. During any clearing, grubbing, excavation or grading in proximity to Railroad's facilities, which, in the opinion of the Railroad Designated Representative, may endanger railroad facilities or operations.

D. During any contractor's operations when, in the opinion of the Railroad Designated Representative, Railroad facilities, including, but not limited to, tracks, buildings, signals, wire lines, or pipe lines, may be endangered.

E. Arrange with the Railroad Designated Representative to provide the adequate number of flag persons to accomplish the work.

3.14 WALKWAYS REQUIRED

Maintain along the outer side of each exterior track of multiple operated track, and on each side of single operated track, an unobstructed continuous space suitable for trainman's use in walking along trains, extending to a line not less than twelve feet (12') from centerline of track. Remove any temporary impediments to walkways and track drainage encroachments or obstructions allowed during work hours before the close of each work day. Construct walkways with railings over open excavation areas when in close proximity of track. Do not violate allowable clearances of these railings to centerline of track: 8' - 6" horizontally for tangent track or 9' - 6" horizontally for curved track.

3.15 COMMUNICATIONS AND SIGNAL LINES

If required, the Railroad will rearrange its communications and signal lines, its grade crossing warning devices, train signals and tracks, and facilities that are in use and maintained by the Railroad's forces in connection with its operation at expense of TxDOT. This work by the Railroad, will be done by its own forces and it is not a part of the Work under this Contract.

3.16 TRAFFIC CONTROL

Coordinate any operations that control traffic across or around railroad facilities with the Railroad Designated Representative.

3.17 CONSTRUCTION EXCAVATIONS AND BORING ACTIVITIES UNDER TRACK

A. Take special precaution and care in connection with excavating and shoring. Excavations for construction of footings, piers, columns, walls or other facilities that require shoring shall comply with requirements of TxDOT, OSHA, AREMA and Railroad "Guidelines for Temporary Shoring".

B. The project plans indicate whether there are fiber optic lines or other such telecommunications systems that require consideration. Regardless, contact the necessary call center to determine if such cable systems are present:

UPRR 1-800-336-9193
7:00 AM to 9:00 PM CST Monday-Friday except holidays,
staffed 24 hrs/day for emergencies
48 hrs notice required

BNSF 1-800-533-2891
24 hour number
5 working days notice required

KCS 1-800-344-8377
Texas One Call, a 24 hour number
48 hrs notice required, excluding weekends and holidays

If a telecommunications system is buried anywhere on or near Railroad's property, coordinate with TxDOT, the Railroad and the Telecommunication Company(ies) to arrange for relocation or protective measures prior to beginning work on or near railroad property. Refer to the project General Notes for additional information.

C. Projects involving a boring or jack and bore operation under track such as drainage pipes or culverts and utilities require an installation plan reviewed and approved by the Railroad and TxDOT prior to proceeding with such construction. A railroad inspector and contractor-assisted monitoring of ground and track movement is required to maintain safe passage of rail traffic. Stop installation and do not allow passage of trains if movements in excess of ¼inch vertical or horizontal is detected in the tracks. Immediately repair the damage to the satisfaction of TxDOT and the Railroad before proceeding.

3.18 RAILROAD FLAGGING

Per the RIGHT OF ENTRY agreement for flagging, notify the Railroad Representative at least 10 working days in advance of Contractor work and at least 30 working days in advance of any Contractor work in which any person or equipment will be within 25 feet of nearest rail or as specified in the Contractor Right of Entry (CROE).

3.19 CLEANING OF RIGHT-OF-WAY

When work is complete, remove all tools, implements, and other materials brought into Railroad Right of Way and leave the Right of Way in a clean and presentable condition to the satisfaction of TxDOT and the Railroad.

Texas Department of Transportation — Rail Division

RAILROAD REQUIREMENTS FOR BRIDGE CONSTRUCTION

FILE:	DN: TxDOT	CK: TxDOT	DW: TxDOT	CK: TxDOT
© TxDOT October 2014	CONT	SECT	JOB	HIGHWAY
REVISIONS March 2020	0684	01	068	SH550
	DIST	COUNTY		SHEET NO.
	21	CAMERON		267

DATE:
FILE:

RAILROAD REQUIREMENTS FOR BRIDGE CONSTRUCTION.dgn

Docusign Envelope ID: D24B0E46-A040-4DCF-9159-2076E4A3664D

DISCLAIMER:
The use of this standard is governed by the "Texas Engineering Practice Act". No warranty of any kind is made by TxDOT for any purpose whatsoever. TxDOT assumes no responsibility for the conversion of this standard to other formats or for incorrect results or damages resulting from its use.

I. WORK AT CROSSING LOCATIONS (AT GRADE, HIGHWAY OVERPASS, HIGHWAY UNDERPASS, PEDESTRIAN, OR CLOSED/ABANDONED)

DOT #: 906 673T
Crossing Type: RR UNDER
RR Company Owning Track at Crossing: UPRR
Operating RR Company at Track: UPRR
RR MP: 1.638
RR Subdivision: PALO ALTO IND LD
City: BROWNSVILLE
County: CAMERON
CSJ at this Crossing: 0684-01-068
Highway/Roadway name crossing the railroad: SH 550 NB
# of regularly scheduled trains per week at this crossing: 1
# of switching movements per day at this crossing: 0
% of estimated contract cost of work within railroad ROW: 8%

DOT #: 972 584D
Crossing Type: RR UNDER
RR Company Owning Track at Crossing: UPRR
Operating RR Company at Track: UPRR
RR MP: 1.583
RR Subdivision: PALO ALTO IND LD
City: BROWNSVILLE
County: CAMERON
CSJ at this Crossing: 0684-01-068
Highway/Roadway name crossing the railroad: SH 550 SB
# of regularly scheduled trains per week at this crossing: 1
# of switching movements per day at this crossing: 0
% of estimated contract cost of work within railroad ROW: 8%

Scope of Work at this Crossing to Be Performed by State Contractor:
CONSTRUCTION OF TWO HIGHWAY OVERPASS BRIDGE STRUCTURES, INCLUDING BUT NOT LIMITED TO CHAIN LINK FENCING, SSTR RAIL, PIER PROTECTION, TEMPORARY SHORING AND PAVEMENT MARKINGS.

Scope of Work at this Crossing to Be Performed by Railroad Company:
PROJECT MANAGEMENT, FIELD VISITS, CONSTRUCTION INSPECTIONS, AND FINAL INSPECTIONS

** Choose: Highway Overpass, Highway Underpass, At Grade, Pedestrian, or Closed/Abandoned

II. OTHER PROJECT WORK WITHIN RAILROAD RIGHTS-OF-WAY (ROW)

NONE

III. FLAGGING & INSPECTION

of Days of Railroad Flagging Expected: 136

On this project, night or weekend flagging is:

- [x] Expected
- [ ] Not Expected

Flagging services will be provided by:

- [ ] Railroad Company: TxDOT will pay flagging invoices
- [x] Outside Party: Contractor will pay flagging invoices, to be reimbursed by TxDOT

Contractor must incorporate flaggers into anticipated construction schedule. The Railroad requires a 30 day notice if their flaggers are to be utilized. If Contractor falls behind schedule due to their own negligence and is not ready for scheduled flaggers, any flagging charges will be paid by Contractor.

Contact Information for Flagging:

- [x] UPRR - UP.info@railpros.com
  Call Center 877-315-0513, Select #1 for flagging
  - UP.request@nrssinc.net
  Call Center 877-984-6777
- [ ] BNSF - BNSF.info@railpros.com
  Call Center 877-315-0513, Select #1 for flagging
- [ ] KCS - KCS.info@railpros.com
  Call Center 877-315-0513, Select #1 for flagging
  - Bottom Line On-Track Safety Services
  bottomline076@aol.com, 903-767-7630
- [ ] OTHERS _____

Contractor must incorporate Construction Inspection into anticipated construction schedule.

- [ ] Not Required
- [x] Required: Contact Information for Construction Inspection:

Benesch - Mindy Totten, Public Project Representative
M: (281) 825-6921
E: mtotten@benesch.com

IV. CONSTRUCTION WORK TO BE PERFORMED BY THE RAILROAD

On this project, construction work to be performed by a railroad company is:

- [ ] Required
- [x] Not Required

Coordinate with TxDOT for any work to be performed by the Railroad Company. TxDOT must issue a work order for any work done by the Railroad Company prior to the work being performed.

V. RAILROAD INSURANCE REQUIREMENTS

Railroad reference number shall be provided by TxDOT CST or DO.

The Contractor shall confirm the insurance requirements with the Railroad as the insurance limits are subject to change without notice.

Insurance policies must be issued for and on behalf of the Railroad. Where more than one Railroad Company is operating on the same right of way or where several Railroad Companies are involved and operate on their own separate rights of way, provide separate insurance policies in the name of each Railroad Company.

No direct compensation will be made to the Contractor for providing the insurance coverages shown below or any deductibles. These costs are incidental to the various bid items.

Type of Insurance	Amount of Coverage (Minimum)
Workers Compensation	$500,000 / $500,000 / $500,000
Commercial General Liability	$2,000,000 / $4,000,000
Business Automobile	$2,000,000 combined single limit

Railroad Protective Liability		
[ ]	Not Required	
[ ]	Non - Bridge Projects	$2,000,000 / $6,000,000
[x]	Bridge Projects	$5,000,000 / $10,000,000
[ ]	Other	

VI. CONTRACTOR'S RIGHT OF ENTRY (ROE) AGREEMENT

On this project, an ROE agreement is:

- [ ] Not Required
- [x] Required: TxDOT CST to assist in obtaining with the UPRR (see Item 5, Article 8.3)
- [ ] Required: UPRR Maintenance Consent Letter. TxDOT CST to assist.
- [ ] Required: Contractor to obtain (see Item 5, Article 8.4)

With the following railroad companies: _____

To view previously approved ROE Agreement templates agreed upon between the State and Railroad, see:

http://www.txdot.gov/inside-txdot/division/rail/samples.html

Approved ROE Agreement templates are not to be modified by the Contractor.

Contractor shall not operate within Railroad Right of Way without an executed Construction & Maintenance Agreement between the State and the Railroad and an executed ROE agreement between the Contractor and the Railroad if required on project.

VII. RAILROAD COORDINATION MEETING

On this project, a Railroad Coordination Meeting is:

- [ ] Not Required
- [x] Required

See Item 5, Article 8.1 for more details.

VIII. SUBCONTRACTORS

Contractor shall not subcontract work without written consent of TxDOT. Subcontractors are required to maintain the same insurance coverage as required of the Contractor.

IX. EMERGENCY NOTIFICATION

In Case of Railroad Emergency
Call Union Pacific Railroad (UPRR)
Railroad Emergency Line at 888-877-7267
Location: DOT 906 673T
RR Milepost 1.638
Subdivision PALO ALTO IND LD

In Case of Railroad Emergency
Call Union Pacific Railroad (UPRR)
Railroad Emergency Line at 888-877-7267
Location: DOT 972 584D
RR Milepost 1.583
Subdivision PALO ALTO IND LD

Texas Department of Transportation — Rail Division

RAILROAD SCOPE OF WORK

PROJECT SPECIFIC DETAILS

FILE: RR Scope of Work.dgn	DN: TxDOT	CK:	DW:	CK:
©TxDOT June 2014	CONT	SECT	JOB	HIGHWAY
REVISIONS	0684	01	068	SH 550
	DIST		COUNTY	SHEET NO.
	21		CAMERON	268

9/2021

DATE:
FILE:

Docusign Envelope ID: D24B0E46-A040-4DCF-9159-2076E4A3664D

EXHIBIT B
TO
PUBLIC HIGHWAY OVERPASS AGREEMENT

SECTION 1 - CONDITIONS AND COVENANTS

A. The Railroad makes no covenant or warranty of title for quiet possession or against encumbrances. The Political Body shall not use or permit use of the Crossing Area for any purposes other than those described in this Agreement. Without limiting the foregoing, the Political Body shall not use or permit use of the Crossing Area for railroad purposes, or for gas, oil or gasoline pipe lines. Any lines constructed on the Railroad's property by or under authority of the Political Body for the purpose of conveying electric power or communications incidental to the Political Body's use of the property for highway purposes shall be constructed in accordance with specifications and requirements of the Railroad, and in such manner as not adversely to affect communication or signal lines of the Railroad or its licensees now or hereafter located upon said property. No nonparty shall be admitted by the Political Body to use or occupy any part of the Railroad's property without the Railroad's written consent. Nothing herein shall obligate the Railroad to give such consent.

B. The Railroad reserves the right to cross the Crossing Area with such railroad tracks as may be required for its convenience or purposes.

C. The right hereby granted is subject to any existing encumbrances and rights (whether public or private), recorded or unrecorded, and also to any renewals thereof. The Political Body shall not damage, destroy or interfere with the property or rights of nonparties in, upon or relating to the Railroad's property, unless the Political Body at its own expense settles with and obtains releases from such nonparties.

D. The Railroad reserves the right to use and to grant to others the right to use the Crossing Area for any purpose not inconsistent with the right hereby granted, including, but not by way of limitation, the right to construct, reconstruct, maintain, operate, repair, alter, renew and replace tracks, facilities and appurtenances on the property and the right to cross the Crossing Area with all kinds of equipment. The Railroad further reserves the right to attach signal, communication or power lines to the Structures, provided that such attachments shall comply with Political Body's specifications and will not interfere with the Political Body's use of the Crossing Area.

E. So far as it lawfully may do so, the Political Body will assume, bear and pay all taxes and assessments of whatsoever nature or kind (whether general, local or special) levied or assessed upon or against the Crossing Area, excepting taxes levied upon and against the property as a component part of the Railroad's operating property.

Docusign Envelope ID: D24B0E46-A040-4DCF-9159-2076E4A3664D

F. If any property or rights other than the right hereby granted are necessary for the construction, maintenance and use of the Structures and its appurtenances, or for the performance of any work in connection with the Project, the Political Body will acquire all such other property and rights at its own expense and without expense to the Railroad.

SECTION 2 -CONSTRUCTION OF STRUCTURES

A. The Political Body, at its expense, will apply for and obtain all public authority required by law, ordinance, rule or regulation for the Project, and will furnish the Railroad upon request with satisfactory evidence that such authority has been obtained.

B. Except as may be otherwise specifically provided herein, the Political Body, at its expense, will furnish all necessary labor, material and equipment, and shall construct and complete the Structures and all appurtenances thereof. The appurtenances shall include, without limitation, all necessary and proper drainage facilities, guard rails or barriers, and right of way fences between the Structures and the railroad tracks. Upon completion of the Project, the Political Body shall remove from the Railroad's property all temporary structures and false work, and will leave the Crossing Area in a condition satisfactory to the Railroad.

C. All construction work of the Political Body upon the Railroad's property (including, but not limited to, construction of the Structures and all appurtenances and all related and incidental work) shall be performed and completed in a manner satisfactory to the Assistant Vice President Engineering-Design of the Railroad or his authorized representative and in compliance with the Plans, the Railroad’s Coordination Requirements set forth in **Exhibit D** and other guidelines furnished by the Railroad.

D. All construction work of the Political Body shall be performed diligently and completed within a reasonable time. No part of the Project shall be suspended, discontinued or unduly delayed without the Railroad's written consent, and subject to such reasonable conditions as the Railroad may specify. It is understood that the Railroad's tracks at and in the vicinity of the work will be in constant or frequent use during progress of the work and that movement or stoppage of trains, engines or cars may cause delays in the work of the Political Body. The Political Body hereby assumes the risk of any such delays and agrees that no claims for damages on account of any delay shall be made against the Railroad by the Political Body and/or the Contractor.

SECTION 3 -INJURY AND DAMAGE TO PROPERTY

If the Political Body, in the performance of any work contemplated by this Agreement or by the failure to do or perform anything for which the Political Body is responsible under the provisions of this Agreement, shall injure, damage or destroy any property of the Railroad or of any other person lawfully occupying or using the property of the Railroad, such property shall be replaced or repaired by the Political Body at the Political Body's own expense, or by the Railroad at the expense of the Political Body, and to the satisfaction of the Railroad's Assistant Vice President Engineering-Design.

Docusign Envelope ID: D24B0E46-A040-4DCF-9159-2076E4A3664D

SECTION 4 - RAILROAD MAY USE CONTRACTORS TO PERFORM WORK

The Railroad may contract for the performance of any of its work by other than railroad forces. The Railroad shall notify the Political Body of the contract price within ninety (90) days after it is awarded. Unless the Railroad's work is to be performed on a fixed price basis, the Political Body shall reimburse the Railroad for the amount of the contract.

SECTION 5 - MAINTENANCE AND REPAIRS

A. The Political Body, at its expense, shall maintain, repair and renew, or cause to be maintained, repaired and renewed, the entire Structures, including, but not limited to, the superstructure, substructure, piers, abutments, walls, approaches and all backfill, grading and drainage required by reason of the Structures, as well as all graffiti removal or overpainting involving the Structures.

B. The Railroad, at its expense, will maintain, repair and renew, or cause to be maintained, repaired and renewed, the rails, ties, ballast and communication and signal facilities owned by the Railroad beneath the Structures.

SECTION 6 - SAFETY MEASURES; PROTECTION OF RAILROAD COMPANY OPERATIONS

It is understood and recognized that safety and continuity of the Railroad's operations and communications are of the utmost importance; and in order that the same may be adequately safeguarded, protected and assured, and in order that accidents may be prevented and avoided, it is agreed with respect to all of said work of the Political Body that the work will be performed in a safe manner and in conformity with the following standards:

A. **Definitions**. All references in this Agreement to the Political Body shall also include the Contractor and their respective officers, agents and employees, and others acting under its or their authority; and all references in this Agreement to work of the Political Body shall include work both within and outside of the Railroad’s property.

B. **Entry on to Railroad's Property by Political Body**. If the Political Body's employees need to enter Railroad's property in order to perform an inspection of the Structures, minor maintenance or other activities, the Political Body shall first provide at least ten (10) working days advance notice to the Railroad Representative. With respect to such entry on to Railroad’s property, the Political Body, to the extent permitted by law, agrees to release, defend and indemnify the Railroad from and against any loss, damage, injury, liability, claim, cost or expense incurred by any person including, without limitation, the Political Body’s employees, or damage to any property or equipment (collectively the “Loss”) that arises from the presence or activities of Political Body’s employees on Railroad’s property, except to the extent that any Loss is caused by the sole direct negligence of Railroad.

Docusign Envelope ID: D24B0E46-A040-4DCF-9159-2076E4A3664D

C. **Flagging**.

(i) If the Political Body's employees need to enter Railroad's property as provided in Paragraph B above, the Political Body agrees to notify the Railroad Representative at least thirty (30) working days in advance of proposed performance of any work by Political Body in which any person or equipment will be within twenty-five (25) feet of any track, or will be near enough to any track that any equipment extension (such as, but not limited to, a crane boom) will reach to within twenty-five (25) feet of any track. No work of any kind shall be performed, and no person, equipment, machinery, tool(s), material(s), vehicle(s), or thing(s) shall be located, operated, placed, or stored within twenty-five (25) feet of any of Railroad's track(s) at any time, for any reason, unless and until a Railroad flagman is provided to watch for trains. Upon receipt of such thirty (30) day notice, the Railroad Representative will determine and inform Political Body whether a flagman need be present and whether Political Body needs to implement any special protective or safety measures. If flagging or other special protective or safety measures are performed by Railroad, Railroad will bill Political Body for such expenses incurred by Railroad. If Railroad performs any flagging, or other special protective or safety measures are performed by Railroad, Political Body agrees that Political Body is not relieved of any of its responsibilities or liabilities set forth in this Agreement.

(ii) The rate of pay per hour for each flagman will be the prevailing hourly rate in effect for an eight-hour day for the class of flagmen used during regularly assigned hours and overtime in accordance with Labor Agreements and Schedules in effect at the time the work is performed. In addition to the cost of such labor, a composite charge for vacation, holiday, health and welfare, supplemental sickness, Railroad Retirement and unemployment compensation, supplemental pension, Employees Liability and Property Damage and Administration will be included, computed on actual payroll. The composite charge will be the prevailing composite charge in effect at the time the work is performed. One and one-half times the current hourly rate is paid for overtime, Saturdays and Sundays, and two and one-half times current hourly rate for holidays. Wage rates are subject to change, at any time, by law or by agreement between Railroad and its employees, and may be retroactive as a result of negotiations or a ruling of an authorized governmental agency. Additional charges on labor are also subject to change. If the wage rate or additional charges are changed, Political Body shall pay on the basis of the new rates and charges.

(iii) Reimbursement to Railroad will be required covering the full eight-hour day during which any flagman is furnished, unless the flagman can be assigned to other Railroad work during a portion of such day, in which event reimbursement will not be required for the portion of the day during which the flagman is engaged in other Railroad work. Reimbursement will also be required for any day not actually worked by the flagman following the flagman's assignment to work on the project for which Railroad is required to pay the flagman and which could not reasonably be avoided by Railroad by assignment of such flagman to other work, even though Political Body may not be working during such time. When it becomes necessary for Railroad to bulletin and assign an employee to a

Docusign Envelope ID: D24B0E46-A040-4DCF-9159-2076E4A3664D

flagging position in compliance with union collective bargaining agreements, Political Body must provide Railroad a minimum of five (5) days notice prior to the cessation of the need for a flagman. If five (5) days notice of cessation is not given, Political Body will still be required to pay flagging charges for the five (5) day notice period required by union agreement to be given to the employee, even though flagging is not required for that period. An additional thirty (30) days notice must then be given to Railroad if flagging services are needed again after such five day cessation notice has been given to Railroad.

D. **Compliance With Laws**. The Political Body shall comply with all applicable federal, state and local laws, regulations and enactments affecting the work. The Political Body shall use only such methods as are consistent with safety, both as concerns the Political Body, the Political Body's agents and employees, the officers, agents, employees and property of the Railroad and the public in general. The Political Body (without limiting the generality of the foregoing) shall comply with all applicable state and federal occupational safety and health acts and regulations. All Federal Railroad Administration regulations shall be followed when work is performed on the Railroad's premises. If any failure by the Political Body to comply with any such laws, regulations, and enactments, shall result in any fine, penalty, cost or charge being assessed, imposed or charged against the Railroad, the Political Body shall reimburse and, to the extent it may lawfully do so, indemnify the Railroad for any such fine, penalty, cost, or charge, including without limitation attorney's fees, court costs and expenses. The Political Body further agrees in the event of any such action, upon notice thereof being provided by the Railroad, to defend such action free of cost, charge, or expense to the Railroad.

E. **No Interference or Delays**. The Political Body shall not do, suffer or permit anything which will or may obstruct, endanger, interfere with, hinder or delay maintenance or operation of the Railroad's tracks or facilities, or any communication or signal lines, installations or any appurtenances thereof, or the operations of others lawfully occupying or using the Railroad's property or facilities.

F. **Supervision**. The Political Body, at its own expense, shall adequately police and supervise all work to be performed by the Political Body, and shall not inflict injury to persons or damage to property for the safety of whom or of which the Railroad may be responsible, or to property of the Railroad. The responsibility of the Political Body for safe conduct and adequate policing and supervision of the Project shall not be lessened or otherwise affected by the Railroad's approval of plans and specifications, or by the Railroad's collaboration in performance of any work, or by the presence at the work site of the Railroad's representatives, or by compliance by the Political Body with any requests or recommendations made by such representatives. If a representative of the Railroad is assigned to the Project, the Political Body will give due consideration to suggestions and recommendations made by such representative for the safety and protection of the Railroad's property and operations.

G. **Suspension of Work**. If at any time the Political Body's engineers or the Vice President-Engineering Services of the Railroad or their respective representatives shall be of the opinion that any work of the Political Body is being or is about to be done or

Docusign Envelope ID: D24B0E46-A040-4DCF-9159-2076E4A3664D

prosecuted without due regard and precaution for safety and security, the Political Body shall immediately suspend the work until suitable, adequate and proper protective measures are adopted and provided.

H. **Removal of Debris**. The Political Body shall not cause, suffer or permit material or debris to be deposited or cast upon, or to slide or fall upon any property or facilities of the Railroad; and any such material and debris shall be promptly removed from the Railroad's property by the Political Body at the Political Body's own expense or by the Railroad at the expense of the Political Body. The Political Body shall not cause, suffer or permit any snow to be plowed or cast upon the Railroad's property during snow removal from the Crossing Area.

I. **Explosives**. The Political Body shall not discharge any explosives on or in the vicinity of the Railroad's property without the prior consent of the Railroad's Vice President-Engineering Services, which shall not be given if, in the sole discretion of the Railroad's Vice President-Engineering Services, such discharge would be dangerous or would interfere with the Railroad's property or facilities. For the purposes hereof, the "vicinity of the Railroad's property" shall be deemed to be any place on the Railroad's property or in such close proximity to the Railroad's property that the discharge of explosives could cause injury to the Railroad's employees or other persons, or cause damage to or interference with the facilities or operations on the Railroad's property. The Railroad reserves the right to impose such conditions, restrictions or limitations on the transportation, handling, storage, security and use of explosives as the Railroad, in the Railroad's sole discretion, may deem to be necessary, desirable or appropriate.

J. **Excavation**. The Political Body shall not excavate from existing slopes nor construct new slopes which are excessive and may create hazards of slides or falling rock, or impair or endanger the clearance between existing or new slopes and the tracks of the Railroad. The Political Body shall not do or cause to be done any work which will or may disturb the stability of any area or adversely affect the Railroad's tracks or facilities. The Political Body, at its own expense, shall install and maintain adequate shoring and cribbing for all excavation and/or trenching performed by the Political Body in connection with construction, maintenance or other work. The shoring and cribbing shall be constructed and maintained with materials and in a manner approved by the Railroad's Assistant Vice President Engineering-Design to withstand all stresses likely to be encountered, including any stresses resulting from vibrations caused by the Railroad's operations in the vicinity.

K. **Drainage**. The Political Body, at the Political Body's own expense, shall provide and maintain suitable facilities for draining the Structures and its appurtenances, and shall not suffer or permit drainage water therefrom to flow or collect upon property of the Railroad. The Political Body, at the Political Body's own expense, shall provide adequate passageway for the waters of any streams, bodies of water and drainage facilities (either natural or artificial, and including water from the Railroad's culvert and drainage facilities), so that said waters may not, because of any facilities or work of the Political Body, be impeded, obstructed, diverted or caused to back up, overflow or damage the property of the

Docusign Envelope ID: D24B0E46-A040-4DCF-9159-2076E4A3664D

Railroad or any part thereof, or property of others. The Political Body shall not obstruct or interfere with existing ditches or drainage facilities.

L. **Notice**. Before commencing any work, the Political Body shall provide the advance notice that is required under the Contractor's Right of Entry Agreement.

M. **Fiber Optic Cables**. Fiber optic cable systems may be buried on the Railroad's property. Protection of the fiber optic cable systems is of extreme importance since any break could disrupt service to users resulting in business interruption and loss of revenue and profits. Political Body shall visit up.com/CBUD to complete and submit the required form to determine if fiber optic cable is buried anywhere on the Railroad's premises to be used by the Political Body. If it is, Political Body will telephone the telecommunications company(ies) involved, arrange for a cable locator, and make arrangements for relocation or other protection of the fiber optic cable prior to beginning any work on the Railroad's premises.

SECTION 7 - INTERIM WARNING DEVICES

If at anytime it is determined by a competent authority, by the Political Body, or by agreement between the parties, that new or improved train activated warning devices should be installed at the Crossing Area, the Political Body shall install adequate temporary warning devices or signs and impose appropriate vehicular control measures to protect the motoring public until the construction or reconstruction of the Structures has been completed.

SECTION 8 - OTHER RAILROADS

All protective and indemnifying provisions of this Agreement shall inure to the benefit of the Railroad and any other railroad company lawfully using the Railroad's property or facilities.

SECTION 9 - BOOKS AND RECORDS

The books, papers, records and accounts of Railroad, so far as they relate to the items of expense for the materials to be provided by Railroad under this Project, or are associated with the work to be performed by Railroad under this Project, shall be open to inspection and audit at Railroad's offices in Omaha, Nebraska, during normal business hours by the agents and authorized representatives of Political Body for a period of three (3) years following the date of Railroad's last billing sent to Political Body.

SECTION 10 -. REMEDIES FOR BREACH OR NONUSE

A. If the Political Body shall fail, refuse or neglect to perform and abide by the terms of this Agreement, the Railroad, in addition to any other rights and remedies, may perform any work which in the judgment of the Railroad is necessary to place the Structures and appurtenances in such condition as will not menace, endanger or interfere with the

Docusign Envelope ID: D24B0E46-A040-4DCF-9159-2076E4A3664D

Railroad's facilities or operations or jeopardize the Railroad's employees; and the Political Body will reimburse the Railroad for the expenses thereof.

B. Nonuse by the Political Body of the Crossing Area for public highway purposes continuing at any time for a period of eighteen (18) months shall, at the option of the Railroad, work a termination of this Agreement and of all rights of the Political Body hereunder.

C. The Political Body will surrender peaceable possession of the Crossing Area and Structures upon termination of this Agreement. Termination of this Agreement shall not affect any rights, obligations or liabilities of the parties, accrued or otherwise, which may have arisen prior to termination.

SECTION 11 - MODIFICATION - ENTIRE AGREEMENT

No waiver, modification or amendment of this Agreement shall be of any force or effect unless made in writing, signed by the Political Body and the Railroad and specifying with particularity the nature and extent of such waiver, modification or amendment. Any waiver by the Railroad of any default by the Political Body shall not affect or impair any right arising from any subsequent default. This Agreement and Exhibits attached hereto and made a part hereof constitute the entire understanding between the Political Body and the Railroad and cancel and supersede any prior negotiations, understandings or agreements, whether written or oral, with respect to the work or any part thereof.

Docusign Envelope ID: D24B0E46-A040-4DCF-9159-2076E4A3664D

EXHIBIT C
TO
PUBLIC HIGHWAY OVERPASS AGREEMENT

Exhibit C (if applicable) will be Railroad's Material and Force Account Estimate.

Docusign Envelope ID: D24B0E46-A040-4DCF-9159-2076E4A3664D

EXHIBIT C

ESTIMATE OF FORCE ACCOUNT WORK
BY THE
UNION PACIFIC RAILROAD COMPANY

DESCRIPTION OF WORK: Engineering and other related services for work to be performed within railroad right of way. This includes railroad flagging services, project and construction management during construction activities in railroad right of way. All necessary railroad services will be billed at actual cost.

DATE:
4/11/2024

LOCATION:
FM 550
DOT: 978233A/978234G

SUBDIVISION
Palo Alto Indl.

STATE:
TX

DESCRIPTION		LABOR	MATERIAL	UP %0	Agency % 100	TOTAL
ENGINEERING						
Project Management		$ 20,000	$ -		$ 20,000.00	**$ 20,000**
Construction Submittals		$ 25,000	$ -	$ -	$ 25,000.00	**$ 25,000**
Construction Observation/Mgmt		$ 300,000	$ -	$ -	$ 300,000.00	**$ 300,000**
Final Inspection		$ 5,000	$ -	$ -	$ 5,000.00	**$ 5,000**
FLAGGING / INSPECTION SERVICES						
RATE (per day)		$ -				
Estimated # Days of Flagging	5	$ -	$ -	$ -	$ -	**$0**
TOTAL PROJECT:		**$ 350,000**	**$ -**	**$ -**	**$ 350,000.00**	**$350,000**

TOTAL ESTIMATED COST: **$350,000**

THE ABOVE FIGURES ARE ESTIMATES ONLY AND SUBJECT TO FLUCTUATION. IN THE EVENT OF AN INCREASE OR DECREASE IN THE COST OR QUANTITY OF MATERIAL OR LABOR REQUIRED, THE RAILROAD WILL BILL FOR ACTUAL COSTS AT THE CURRENT RATES EFFECTIVE THEREOF.

Flagging may be performed by a third-party contractor. Any flagging performed by a third-party contractor will be billed at said third-party contractor rate not included in the above estimate. Alternatively, the Agency may enter into a separate agreement with third-party contractor and will be responsible for all actual costs incurred.

Docusign Envelope ID: D24B0E46-A040-4DCF-9159-2076E4A3664D

EXHIBIT D
TO
PUBLIC HIGHWAY OVERPASS AGREEMENT

RAILROAD COORDINATION REQUIREMENTS

1.01 DEFINITIONS

Agreement: Agreement that has been signed, or will be signed, between Railroad and Agency covering the construction and maintenance of the Project.
Agency: Cameron County Regional Mobility Authority
AREMA: American Railway Engineering and Maintenance-of-way Association
Contractor: The contractor or contractors hired by the Agency to perform any project work on any portion of Railroad's property and shall also include the Contractor's subcontractors and the Contractor's and subcontractor's respective employees, officers and agents, and others acting under its or their authority.
MUTCD: Manual on Uniform Traffic Control Devices
Project: Agency's Project Number _____ covering the construction of two new overpasses
Railroad: Union Pacific Railroad Company
Railroad Project Representative: Railroad's Manager of Industry and Public Projects for this Project (see Section 1.03)
Railroad MTM Representative: Railroad's Manager of Track Maintenance for this Project (see Section 1.03)
Requirements: The Railroad Coordination Requirements set forth in this Exhibit.

1.02 DESCRIPTION

This Project includes construction work within Railroad's right-of-way. These Requirements describe coordination with the Railroad when work by the Contractor will be performed upon, over or under the Railroad right-of-way or may impact current or future Railroad operations. The Contractor will coordinate with the Railroad while performing the work outlined in this Agreement and shall afford the same cooperation with the Railroad as it does with the Agency. All submittals and work shall be completed in compliance with these Requirements, Railroad guidelines and requirements, AREMA recommendations and/or as directed by the Railroad Local Representative and/or the Railroad MTM Representative.

1.03 UPRR CONTACTS

The Railroad Project Representative for this project is:

Mindy Totten
281-825-6921
mtotten@benesch.com

For Railroad flagging services and track work, contact the following Railroad MTM Representative:

Anthony Johnson
402-637-3962
amjohnsson@up.com

1.04 PLANS / SPECIFICATIONS

The plans and specifications for this Project, affecting the Railroad, are subject to the written approval by the Railroad. Changes in the plans made after the execution of the Agreement and/or the awarding of the Project to the Contractor are subject to the prior review and written approval of the Agency and the Railroad.

Docusign Envelope ID: D24B0E46-A040-4DCF-9159-2076E4A3664D

No construction work shall commence until final stamped plans and/or changes to final stamped plans have been reviewed and approved by the Railroad in writing. The Railroad's review and approval of the Agency's and/or Contractor's plans in no way relieves the Agency and Contractor from their responsibilities, obligations and/or liabilities under this Agreement, Agency's agreement with the Contractor for the Project and/or in the separate Contractor's Right of Entry Agreement referenced in Section 1.08. Railroad's approval will be given with the understanding that the Railroad makes no representations or warranty as to the validity, accuracy, legal compliance or completeness of Agency's and/or Contractor's plans and that any reliance by the Agency or the Contractor with respect to such plans is at the risk of the Agency and the Contractor.

1.05 UTILITIES AND FIBER OPTICS

A. All installations shall be constructed in accordance with current AREMA recommendations and Railroad specifications and requirements. Railroad general guidelines and the required application forms for utility installations can be found on the Railroad website at http://www.uprr.com/reus/pipeline/install.shtml.

B. It shall be the responsibility of the Contractor, at its expense, to make arrangements directly with utility companies involving the protection, encasement, reinforcement, relocation, replacement, removing or abandonment in place of non-railroad facilities affected by the Project. Railroad has no obligation to supply additional Railroad property for non-railroad facilities affected by this Project, nor does the Railroad have any obligation to permit non railroad facilities to be abandoned in place or relocated on Railroad's property. Any facility and/or utility that crosses Railroad right of way must be covered under an agreement with the Railroad including, without limitation, any relocations of an existing facility and/or utility.

C. Any longitudinal fiber optic lines on Railroad right of way shall be treated as Railroad facilities. Project design may need to be altered to accommodate such facilities.

D. Any fiber optic relocations or protections that are required due to this Project will be at the Agency's expense.

1.06 GENERAL

A. It is essential that the proposed construction shall be performed without interference to Railroad operations and in compliance with all applicable Railroad and Federal Railroad Administration rules and regulations. The Railroad shall be reimbursed by the Contractor or Agency for train delay costs and lost revenue claims due to any delays or interruption of train operations resulting from the Contractor's construction or other activities.

B. Track protection is required for all work equipment (including rubber tired equipment) operating within 25 feet from nearest rail. All work shall be designed and executed outside the temporary construction clearance envelope defined in Section 1.12.

C. The Contractor is also advised that new facilities within the Project may be scheduled to be built by the Railroad and that certain Contractor's activities cannot proceed until that work is complete. The Contractor shall be aware of the limits of responsibilities, allow sufficient time in the schedule for that work to be accomplished and shall coordinate its efforts with the Railroad.

1.07 RAILROAD OPERATIONS

A. The Contractor shall be advised that trains and/or equipment should be expected on any track, at any time, and in either direction. The Contractor shall communicate with the Railroad MTM Representative to improve the Contractor's understanding of Railroad traffic volume and operation at the Project site. The Contractor's bid shall be structured assuming intermittent track windows as defined in Section 1.07 C.

Docusign Envelope ID: D24B0E46-A040-4DCF-9159-2076E4A3664D

B. All Railroad tracks within and adjacent to the Project site are to be assumed as active and rail traffic over these facilities shall be maintained throughout the Project. Activities may include both through moves and switching moves to local customers. Railroad traffic and operations can occur continuously throughout the day and night on these tracks and shall be maintained at all times as defined herein. The Contractor shall coordinate and schedule the work so that construction activities do not interfere with Railroad's operations.

C. Work windows for this Project shall be coordinated with the Agency or Contractor and the Railroad Project Representative and the Railroad MTM Representative. Types of work windows include Conditional Work Windows and Absolute Work Windows, as defined below:

1. Conditional Work Window: A period of time in which Railroad's operations have priority over construction activities. When construction activities may occur on and adjacent to the railroad tracks within 25 feet of the nearest track, a Railroad flag person will be required. At the direction of the flag person, upon approach of a train and when trains are present on the tracks, the tracks must be cleared (i.e., no construction equipment, materials or personnel within 25 feet from the nearest active track or as directed by the Railroad MTM Representative). Conditional Work Windows are available for the project subject to Railroad's local operating unit review and approval.

2. Absolute Work Window: A period of time in which construction activities are given priority over Railroad's operations. During this time the designated Railroad track(s) will be inactive for train movements and may be fouled by the Contractor. Before the end of an Absolute Work Window, all Railroad tracks and signals must be completely operational for normal train operations. Also, all Railroad, Public Utilities Commission and Federal Railroad Administration requirements, codes and regulations for operational tracks must be complied with. Should the operating tracks and/or signals be affected, the Railroad will perform inspections of the work prior to placing the affected track back into service. Railroad flag persons will be required for construction activities requiring an Absolute Work Window. **Absolute Work Windows will generally not be granted. Any request will require a detailed written explanation for Railroad review and approval.**

1.08 RIGHT OF ENTRY, ADVANCE NOTICE AND WORK STOPPAGES

A. Prior to beginning any work within the Railroad right-of-way, the Contractor shall enter into an agreement with the Railroad in the form of the Contractor's Right of Entry Agreement, attached as Exhibit E, or latest version thereof provided by the Railroad. There is a fee for processing of the agreement which shall be borne by the Contractor. The right of entry agreement shall specify working time frames, flagging, inspection and insurance requirements and any other items specified by the Railroad.

B. The Contractor shall give advance notice to the Railroad as required in the Contractor's Right of Entry Agreement before commencing work in connection with construction upon or over Railroad's right-of-way and shall observe the Railroad rules and regulations with respect thereto.

C. All work upon the Railroad right-of-way shall be done at such times and in such a manner as not to interfere with or endanger the operations of the Railroad. Whenever work may affect the operations or safety of trains, the method of doing such work shall first be submitted to the Railroad MTM Representative for approval, but such approval shall not relieve the Contractor from liability. Any work to be performed by the Contractor, which requires flagging service or inspection service, shall be deferred until the flagging protection required by the Railroad is available at the job site. See Section 1.21 for railroad flagging requirements.

D. The Contractor shall make requests in writing to both the Railroad Project Representative and the Railroad MTM Representative for both Absolute and Conditional Work Windows, at least two weeks in advance of any work. The written request must include:

1. Description of work to be done.

Docusign Envelope ID: D24B0E46-A040-4DCF-9159-2076E4A3664D

2. The days and hours that work will be performed.
3. The exact location of the work and proximity to the tracks.
4. The type of window and amount of time requested.
5. The designated contact person for the Contractor.

The Contractor shall provide a written confirmation notice to the Railroad MTM Representative at least fifteen (15) days prior to commencing work in connection with the approved work windows when work will be performed within **25 feet of any track center line.** All work shall be performed in accordance with previously approved work plans.

E. Should a condition arise from, or in connection with, the work which requires immediate and unusual actions to be made to protect operations and property of the Railroad, the Contractor shall undertake such actions. If, in the judgment of the Railroad MTM Representative, such actions are insufficient, the Railroad MTM Representative may require or provide such actions as deemed necessary. In any event, such actions shall be at the Contractor's expense and without cost to the Railroad. The Railroad or Agency have the right to order the Contractor to temporarily cease operations in the event of an emergency or if, in the opinion of the Railroad MTM Representative, the Contractor's operations may inhibit the Railroads operations. In the event such an order is given, the Contractor shall immediately notify the Agency of the order.

1.09 INSURANCE

The Contractor shall not begin work within the Railroad's right-of-way until the Railroad has been furnished the insurance policies, binders, certificates and endorsements required by the Contractor's Right-of-Entry Agreement, and the Railroad Project Representative has advised the Agency that such insurance is in accordance with such Agreement. The required insurance shall be kept in full force and effect during the performance of work and thereafter until the Contractor removes all tools, equipment, and material from Railroad property and cleans the premises in a manner reasonably satisfactory to the Railroad.

1.10 RAILROAD SAFETY ORIENTATION

All personnel employed by the Agency, Contractor and all subcontractors must complete the Railroad's course "Property Access Training" and be registered prior to working on Railroad property. This training is available at https://www.up.com/aboutup/community/safety/erailsafe/up-pat/index.htm. **This training is required to be completed annually. The preceding training does not apply for longitudinal fiber optic installations.**

1.11 COOPERATION

The Railroad shall cooperate with the Contractor in the scheduling of Project work with the understanding that Railroad's train operations at the job site shall have priority over the Contractor's activities.

1.12 CONSTRUCTION CLEARANCES

The Contractor shall abide by the twenty-one ft six inches (21.5) foot temporary vertical construction clearance defined in section 4.4.1.1 and fifteen (15) foot temporary horizontal construction clearance defined in section 4.4.1.2 of BNSF and UPRR Guidelines for Railroad Grade Separation Projects. It shall be the Contractor's responsibility to obtain such guidelines from the Agency or Railroad.

Reduced temporary construction clearances, which are less than construction clearances defined above, will require special review and approval by the Railroad.

Any proposed variance on the specified minimum clearances due to the Contractor's operations shall be submitted to the Railroad Project Representative through the Agency at least thirty (30) days in advance of the work. No work shall be undertaken until the variance is approved in writing by the Railroad Project Representative.

Docusign Envelope ID: D24B0E46-A040-4DCF-9159-2076E4A3664D

1.13 SUBMITTALS

A. Construction submittals and Requests for Information (RFI) shall be submitted per Section 3 of BNSF and UPRR Guidelines for Railroad Grade Separation Projects.

B. The minimum review times, as indicated in tables 3-1 and 3-2 of Section 3.10 of the BNSF and UPRR Guidelines for Railroad Grade Separation Projects, should be anticipated for review of all submittals. Guidelines for Railroad Grade Separation Projects, should be anticipated for review of all submittals. The details of the construction affecting the Railroad tracks and property, not already included in the contract plans, shall be submitted by the Agency to the Railroad Project Representative for the Railroad's review and written approval before such construction is undertaken. The Railroad shall not be liable to Agency, Contractor, and or any other person or entity if the Railroad's review exceeds a four-week review time.

C. As Built Submittals shall be submitted per Section 3 of BNSF and UPRR Guidelines for Railroad Grade Separation Projects.

1.14 MAINTENANCE OF PROPER DRAINAGE AND DAMAGE TO RAILROAD FACILITIES

A. The Contractor, at its expense, shall be required to maintain all ditches and drainage structures free of silt or other obstructions which may result from the Contractor's operations and to repair and restore any Railroad property, tracks and facilities of Railroad and/or its tenants.

B. The Contractor must submit a proposed method of erosion control and have the method reviewed and approved by the Railroad prior to beginning any grading on the project site. Erosion control methods must comply with all applicable local, state and federal regulations.

1.15 SITE INSPECTIONS BY RAILROAD PROJECT REPRESENTATIVE, RAILROAD MTM REPRESENTATIVE OR RAILROAD'S CONTRACTOR

A. In addition to the office reviews of construction submittals, site observations will be performed by the Railroad Project Representative, Railroad MTM Representative or Railroad's Contractor at significant points during construction per Section 4.11 of BNSF and UPRR Guidelines for Railroad Grade Separation Projects.

B. Site inspections are not limited to the milestone events listed in the guidelines. Site visits to check the progress of work may be performed at any time throughout the construction process as deemed necessary by the Railroad.

C. A detailed construction schedule, including the proposed temporary horizontal and vertical clearances and construction sequence for all work to be performed, shall be provided by the Contractor to the Agency for submittal to the Railroad's Project Representative for review and approval prior to commencement of work. This schedule shall also include the anticipated dates on which the above listed events will occur. This schedule shall be updated for all critical listed events as necessary but at least monthly so that site visits may be scheduled.

1.16 RAILROAD REPRESENTATIVES

A. Railroad representatives, conductors, flag persons or watch persons will be provided by the Railroad at the expense of the Agency or Contractor (as stated elsewhere in these bid documents) to protect Railroad facilities, property and movements of its trains and engines. In general, the Railroad will furnish such personnel or other protective services as follows:

1. When any part of any equipment or object, such as erection or construction activities, is standing or being operated within 25 feet, measured horizontally from centerline, of any track on which trains may operate.

Docusign Envelope ID: D24B0E46-A040-4DCF-9159-2076E4A3664D

2. For any excavation below the elevation of track subgrade when, in the opinion of the Railroad MTM Representative, the track or other Railroad facilities may be subject to settlement or movement.

3. During any clearing, grubbing, excavation or grading in proximity to Railroad facilities which, in the opinion of the Railroad MTM Representative, may affect Railroad facilities or inhibit operations.

4. During any Contractor's operations when, in the opinion of the Railroad MTM Representative, the Railroad facilities, including, but not limited to, tracks, buildings, signals, wire lines or pipe lines, may be endangered.

B. The Contractor shall arrange with the Railroad Local Representative to provide the adequate number of flag persons to accomplish the work.

1.17 WALKWAYS REQUIRED

Parallel to the outer side of each exterior track of multiple operated track and on each side of single operated track, an unobstructed continuous space suitable for trainman's use in walking along trains, extending in width not less than fifteen feet (15') perpendicular from centerline of track, shall be maintained. Any temporary impediments to walkways and track drainage encroachments or obstructions allowed during working hours must be covered, guarded and/or protected as soon as practical. Walkways with railings shall be constructed by the Contractor over open excavation areas when in close proximity of track, and railings shall not be closer than 9' perpendicular from the center line of tangent track or 9' – 6" horizontal from curved track.

1.18 COMMUNICATIONS AND SIGNAL LINES

If required, the Railroad, at Agency's expense, will rearrange its communications and signal lines, grade crossing warning devices, train signals, tracks and facilities that are in use and maintained by Railroad forces in connection with its operation. This work by the Railroad will be done by its own forces or by contractors under a continuing contract and may or may not be a part of the work under this contract.

1.19 TRAFFIC CONTROL

The Contractor's operations which control traffic across or around Railroad facilities shall be coordinated with and approved by the Railroad MTM Representative and shall be in compliance with the MUTCD.

1.20 CONSTRUCTION EXCAVATIONS;CALL BEFORE YOU DIG NUMBER

A. The Contractor shall be required to take special precautions and care in connection with excavating and shoring. Excavations for construction of footings, piers, columns, walls or other facilities that require shoring shall comply with requirements of OSHA, AREMA and Railroad "Guidelines for Temporary Shoring".

B. In addition to calling the "811" number and/or the local "one call center", the Contractor shall call the Railroad's "Call Before Your Dig" number at least 48 hours prior to commencing work at 1-800-336-9193 during normal business hours (6:30 a.m. to 8:00 p.m. Central Standard Time, Monday through Friday, except holidays - also a 24 hour, 7 day a week number for emergency calls) to determine location of fiber optics. If a telecommunications system is buried anywhere on or near Railroad property, the Contractor will co-ordinate with the Railroad and the Telecommunication Company(ies) to arrange for relocation or other protection of the system prior to beginning any work on or near Railroad property. The determination of whether fiber optics will be affected by the Project shall be made during the initial design phase of the Project.

C. The Railroad does not allow temporary at grade crossings unless absolutely necessary and there is no alternative route available to contractor to access the project site. Alternative plans should be considered to avoid crossing Railroad tracks at grade.

Docusign Envelope ID: D24B0E46-A040-4DCF-9159-2076E4A3664D

1.21 RAILROAD FLAGGING

Performance of any work by the Contractor in which person(s) or equipment will be within twenty-five (25) feet of any track, or that any object or equipment extension (such as, but not limited to, a crane boom) will reach within twenty-five (25) feet of any track, require railroad flagging services or other protective measures. The Contractor shall give an advance notice to the Railroad as required in the Contractor's Right of Entry Agreement before commencing any such work, allowing the Railroad to determine the need for flagging or other protective measures which ensure the safety of Railroad's operations, employees and equipment. Contractor shall comply with all other requirements regarding flagging services covered by the Contractor's Right of Entry Agreement. Any costs associated with failure to abide by these requirements will be borne by the Contractor.

The estimated pay rate for each flag person is $1,400 per day for a(n) 8-hour work day with time and one-half for overtime, Saturdays, Sundays; double time and one-half for holidays. Flagging rates are set by the Railroad and are subject to change due to, but not limited to, travel time, setup plus, per diem and rest time (if work is required at night).

1.22 CLEANING OF RIGHT-OF-WAY

The Contractor shall, upon completion of the work to be performed within the right-of-way and/or properties of the Railroad and adjacent to its tracks, wire lines and other facilities, promptly remove from the Railroad right-of-way all Contractor's tools, implements and other materials whether brought upon the right-of-way by the Contractor or any subcontractors employee or agent of Contractor or of any subcontractor, and leave the right-of-way in a clean and presentable condition to the satisfaction of the Railroad.

1.23 CONTRACTOR'S RESPONSIBILITY OF SUPERVISION

The Contractor, at its expense, shall adequately supervise all work to be performed by the Contractor. Such responsibility shall not be lessened or otherwise affected by Railroad's approval of plans and specifications, or by the presence at the work site of the Railroad Project Representative, Railroad MTM Representative or any other Railroad representative or Railroad contractor providing inspection services, or by the compliance by the Contractor with any requests or recommendations made by such representatives. The Contractor will give due consideration to suggestions and recommendations made by such representatives for the safety and protection of the Railroad's property and operations.

1.24 USE OF EXPLOSIVES AT PROJECT SITE PROHIBITED

The Contractor's use of explosives at the Project site is expressly prohibited unless authorized in advance in writing by the Railroad Project Representative.

Docusign Envelope ID: D24B0E46-A040-4DCF-9159-2076E4A3664D

EXHIBIT E

TO

PUBLIC HIGHWAY OVERPASS AGREEMENT

CONTRACTOR'S
RIGHT OF ENTRY AGREEMENT

THIS AGREEMENT is made and entered into as of the_____day of_____, 20_____, by and between **UNION PACIFIC RAILROAD COMPANY**, a Delaware corporation ("Railroad"); and _____, a _____ corporation ("Contractor").

RECITALS:

Contractor has been hired by_____to perform work relating to_____(the "Work") with all or a portion of such Work to be performed on property of Railroad in the vicinity of Railroad's Milepost _____on Railroad's_____[Subdivision or Branch] [at or near DOT No. _____located at or near_____, in_____County, State of_____, as such location is in the general location shown on the print marked **Exhibit A**, attached hereto and hereby made a part hereof, which Work is the subject of a contract dated_____between Railroad and_____.

Railroad is willing to permit Contractor to perform the Work described above at the location described above subject to the terms and conditions contained in this agreement

AGREEMENT:

NOW, THEREFORE, it is mutually agreed by and between Railroad and Contractor, as follows:

ARTICLE 1 - DEFINITION OF CONTRACTOR.

For purposes of this agreement, all references in this agreement to Contractor shall include Contractor's contractors, subcontractors, officers, agents and employees, and others acting under its or their authority. For purposes of clarity, Contractor agrees that any CIC (defined below) hired by Contractor is a subcontractor of Contractor and therefore included in the defined term Contractor pursuant to the foregoing sentence.

ARTICLE 2 - RIGHT GRANTED; PURPOSE.

Railroad hereby grants to Contractor the right, during the term hereinafter stated and upon and subject to each and all of the terms, provisions and conditions herein contained, to enter upon and have ingress to and egress from the property described in the Recitals for the purpose of performing the Work described in the Recitals above. The right herein granted to Contractor is limited to those portions of Railroad's property specifically described herein, or as designated by the Railroad Representatives named in Article 4.

ARTICLE 3 - TERMS AND CONDITIONS CONTAINED IN EXHIBITS B AND C.

The terms and conditions contained in **Exhibit B** and **Exhibit C**, attached hereto, are hereby made a part of this agreement.

Docusign Envelope ID: D24B0E46-A040-4DCF-9159-2076E4A3664D

ARTICLE 4 - ALL EXPENSES TO BE BORNE BY CONTRACTOR; RAILROAD REPRESENTATIVES.

A. Contractor shall bear any and all costs and expenses associated with any Work performed by Contractor (including without limitation any CIC), or any costs or expenses incurred by Railroad relating to this agreement.

B. Contractor shall coordinate all of its Work with the following Railroad representatives or their duly authorized representative (the "Railroad Representatives"):

MTM: _____ PM: _____
_____ _____
_____ _____
_____ _____

C. Contractor, at its own expense, shall adequately police and supervise all Work to be performed by Contractor and shall ensure that such Work is performed in a safe manner as set forth in Section 7 of **Exhibit B.** The responsibility of Contractor for safe conduct and adequate policing and supervision of Contractor's Work shall not be lessened or otherwise affected by Railroad's approval of plans and specifications involving the Work, or by Railroad's collaboration in performance of any Work, or by the presence at the Work site of a Railroad Representative, or by compliance by Contractor with any requests or recommendations made by Railroad Representative.

ARTICLE 5 - SCHEDULE OF WORK ON A MONTHLY BASIS.

The Contractor, at its expense, shall provide on a monthly basis a detailed schedule of Work to the Railroad Representative named in Article 4B above. The reports shall start at the execution of this agreement and continue until this agreement is terminated as provided in this agreement or until the Contractor has completed all Work on Railroad's property.

ARTICLE 6 - TERM; TERMINATION.

A. The grant of right herein made to Contractor shall commence on the date of this agreement, and continue until_____, unless sooner terminated as herein provided, or at such time as Contractor has completed its Work on Railroad's property, whichever is earlier. Contractor agrees to notify the Railroad Representative in writing when it has completed its Work on Railroad's property.

B. This agreement may be terminated by either party on ten (10) days written notice to the other party.

ARTICLE 7 - CERTIFICATE OF INSURANCE.

A. Before commencing any Work and throughout the entire term of this Agreement, Contractor, at its expense, shall procure and maintain in full force and effect the types and minimum limits of insurance specified in **Exhibit C** of this agreement and require each of its subcontractors to include the insurance endorsements as required under Section 12 of **Exhibit B** of this agreement.

B. Not more frequently than once every two (2) years, Railroad may reasonably modify the required insurance coverage to reflect then-current risk management practices in the railroad industry and underwriting practices in the insurance industry.

C. Upon request of Railroad, Contractor shall provide to Railroad a certificate issued by its insurance carrier evidencing the insurance coverage required under **Exhibit B**.

D. Contractor understands and accepts that the terms of this Article are wholly separate from and independent of the terms of any indemnity provisions contained in this Agreement.

Docusign Envelope ID: D24B0E46-A040-4DCF-9159-2076E4A3664D

E. Upon request of Railroad, insurance correspondence, binders, policies, certificates and endorsements shall be sent to:

Union Pacific Railroad Company
_____
[Insert mailing address]
_____
_____
Attn:_____
Project No. 0773787

ARTICLE 8 - PRECONSTRUCTION MEETING.

If the Work to be performed by the Contractor will involve the Railroad providing any flagging protection (or if a CIC is approved to provide flagging protection pursuant to the terms set forth herein) and/or there is separate work to be performed by the Railroad, the Contractor confirms that no work shall commence until the Railroad and Contractor participate in a preconstruction meeting involving flagging procedures and coordination of work activities of the Contractor and the Railroad (and any CIC, as applicable.) Union Pacific's Third Party Flagging Policy at the link provided here: www.up.com/flagging

ARTICLE 9. DISMISSAL OF CONTRACTOR'S EMPLOYEE.

At the request of Railroad, Contractor shall remove from Railroad's property any employee of Contractor who fails to conform to the instructions of the Railroad Representative in connection with the Work on Railroad's property, and any right of Contractor shall be suspended until such removal has occurred. Contractor shall indemnify Railroad against any claims arising from the removal of any such employee from Railroad's property.

ARTICLE 10. ADMINISTRATIVE FEE.

Upon the execution and delivery of this agreement, Contractor shall pay to Railroad One Thousand Twenty Five Dollars ($1,025.00) as reimbursement for clerical, administrative and handling expenses in connection with the processing of this agreement.

ARTICLE 11. CROSSINGS; COMPLIANCE WITH MUTCD AND FRA GUIDELINES.

A. No additional vehicular crossings (including temporary haul roads) or pedestrian crossings over Railroad's trackage shall be installed or used by Contractor without the prior written permission of Railroad.

B. Any permanent or temporary changes, including temporary traffic control, to crossings must conform to the Manual of Uniform Traffic Control Devices (MUTCD) and any applicable Federal Railroad Administration rules, regulations and guidelines, and must be reviewed by the Railroad prior to any changes being implemented. In the event the Railroad is found to be out of compliance with federal safety regulations due to the Contractor's modifications, negligence, or any other reason arising from the Contractor's presence on the Railroad's property, the Contractor agrees to assume liability for any civil penalties imposed upon the Railroad for such noncompliance.

ARTICLE 12.- EXPLOSIVES.

Explosives or other highly flammable substances shall not be stored or used on Railroad's property without the prior written approval of Railroad.

Docusign Envelope ID: D24B0E46-A040-4DCF-9159-2076E4A3664D

IN WITNESS WHEREOF, the parties hereto have duly executed this agreement in duplicate as of the date first herein written.

UNION PACIFIC RAILROAD COMPANY

By: _____

Title: _____

_____
(Name of Contractor)

By: _____

Name: _____

Title: _____

Phone: _____

E-Mail: _____

Docusign Envelope ID: D24B0E46-A040-4DCF-9159-2076E4A3664D

EXHIBIT A
TO
CONTRACTOR'S RIGHT OF ENTRY AGREEMENT

Exhibit A will be a print showing the general location of the work site.

Docusign Envelope ID: D24B0E46-A040-4DCF-9159-2076E4A3664D

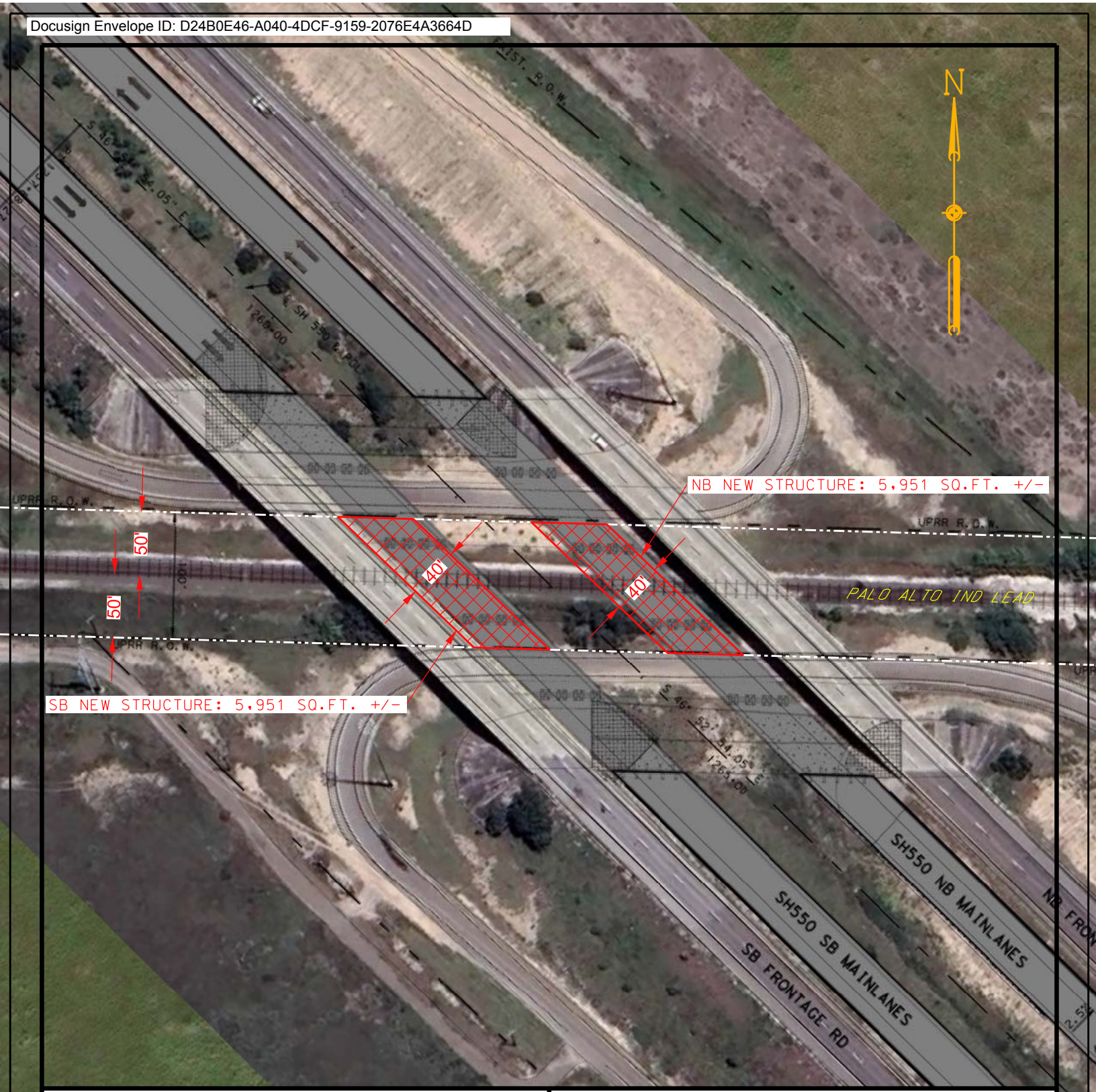

LEGEND:

NEW STRUCTURES

UPRRCO. R/W OUTLINED

CADD FILENAME	0773787
SCAN FILENAME	AERIAL PRINT

NOTE: BEFORE YOU BEGIN ANY WORK, SEE AGREEMENT FOR FIBER OPTIC PROVISIONS.

EXHIBIT "A"

UNION PACIFIC RAILROAD COMPANY

BROWNSVILLE, CAMERON COUNTY, TX

M.P. 1.60 TO 1.62 - PALO ALTO IND LEAD

UP/TX/VO/PALOALTOINDLD1
SCALE: 1" = 100'

OFFICE OF REAL ESTATE
OMAHA, NEBRASKA DATE: 10-9-2024

DSK FILE: 0773787

Docusign Envelope ID: D24B0E46-A040-4DCF-9159-2076E4A3664D

EXHIBIT B
TO
CONTRACTOR'S RIGHT OF ENTRY AGREEMENT

Section 1. NOTICE OF COMMENCEMENT OF WORK - RAILROAD FLAGGING - PRIVATE FLAGGING.

A. Contractor agrees to notify the Railroad Representative at least ten (10) working days in advance of Contractor commencing its Work and at least thirty (30) working days in advance of proposed performance of any Work by Contractor in which any person or equipment will be within twenty-five (25) feet of any track, or will be near enough to any track that any equipment extension (such as, but not limited to, a crane boom) will reach to within twenty-five (25) feet of any track.

B. No work of any kind shall be performed, and no person, equipment, machinery, tool(s), material(s), vehicle(s), or thing(s) shall be located, operated, placed, or stored within twenty-five (25) feet of any of Railroad's track(s) at any time, for any reason, unless and until a Railroad approved flagman is provided to watch for trains. Upon receipt of such thirty (30)-day notice, the Railroad Representative will determine and inform Contractor whether a flagman need be present and whether Contractor needs to implement any special protective or safety measures.

C. Contractor shall be permitted to hire a private contractor to perform flagging or other special protective or safety measures (such private contractor being commonly known in the railroad industry as a contractor-in-charge ("CIC")) in lieu of Railroad providing such services or in concert with Railroad providing such services, subject to prior written approval by Railroad, which approval shall be in Railroad's sole and absolute discretion. If Railroad agrees to permit Contractor to utilize a CIC pursuant to the preceding sentence, Contractor shall obtain Railroad's prior approval in writing for each of the following items, as determined in all respects in Railroad's sole and absolute discretion: (i) the identity of the third-party performing the role of CIC; (ii) the scope of the services to be performed for the project by the approved CIC; and (iii) any other terms and conditions governing such services to be provided by the CIC. If flagging or other special protective or safety measures are performed by an approved CIC, Contractor shall be solely responsible for (and shall timely pay such CIC for) its services. Railroad reserves the right to rescind any approval pursuant to this Section 1, Subsection C., in whole or in part, at any time, as determined in Railroad's sole and absolute discretion.

D. If any flagging or other special protective or safety measures are performed by employees of Railroad and/or any contractor of Railroad, Railroad will bill Contractor for such expenses incurred by Railroad, unless Railroad and a federal, state or local governmental entity have agreed that Railroad is to bill such expenses to the federal, state or local governmental entity. If Railroad will be sending the bills to Contractor, Contractor shall pay such bills within thirty (30) days of Contractor's receipt of billing.

E. If any flagging or other special protective or safety measures are performed by Railroad or a CIC, Contractor agrees that Contractor is not relieved of any of its responsibilities or liabilities set forth in this agreement.

F. The provisions set forth in this subsection are only applicable for Flagging Services performed by employees of Railroad: the rate of pay per hour for each flagman will be the prevailing hourly rate in effect for an eight-hour day for the class of flagmen used during regularly assigned hours and overtime in accordance with labor agreements and schedules in effect at the time the Work is performed. In addition to the cost of such labor, a composite charge for vacation, holiday, health and welfare, supplemental sickness, Railroad Retirement and unemployment compensation, supplemental pension, Employees Liability and Property Damage and Administration will be included, computed on actual payroll. The composite charge will be the prevailing composite charge in effect at the time the Work is performed. One and one-half times the current hourly rate is

Docusign Envelope ID: D24B0E46-A040-4DCF-9159-2076E4A3664D

paid for overtime, Saturdays and Sundays, and two and one-half times current hourly rate for holidays. Wage rates are subject to change, at any time, by law or by agreement between Railroad and its employees, and may be retroactive as a result of negotiations or a ruling of an authorized governmental agency. Additional charges on labor are also subject to change. If the wage rate or additional charges are changed, Contractor (or the governmental entity, as applicable) shall pay on the basis of the new rates and charges. If flagging is performed by Railroad, reimbursement to Railroad will be required covering the full eight-hour day during which any flagman is furnished, unless the flagman can be assigned to other Railroad work during a portion of such day, in which event reimbursement will not be required for the portion of the day during which the flagman is engaged in other Railroad work. Reimbursement will also be required for any day not actually worked by the flagman following the flagman's assignment to work on the project for which Railroad is required to pay the flagman and which could not reasonably be avoided by Railroad by assignment of such flagman to other work, even though Contractor may not be working during such time. When it becomes necessary for Railroad to bulletin and assign an employee to a flagging position in compliance with union collective bargaining agreements, Contractor must provide Railroad a minimum of five (5) days notice prior to the cessation of the need for a flagman. If five (5) days notice of cessation is not given, Contractor will still be required to pay flagging charges for the five (5) day notice period required by union agreement to be given to the employee, even though flagging is not required for that period. An additional thirty (30) days notice must then be given to Railroad if flagging services are needed again after such five-day cessation notice has been given to Railroad.

Section 2. <u>LIMITATION AND SUBORDINATION OF RIGHTS GRANTED</u>

A. The foregoing grant of right is subject and subordinate to the prior and continuing right and obligation of the Railroad to use and maintain its entire property including the right and power of Railroad to construct, maintain, repair, renew, use, operate, change, modify or relocate railroad tracks, roadways, signal, communication, fiber optics, or other wirelines, pipelines and other facilities upon, along or across any or all parts of its property, all or any of which may be freely done at any time or times by Railroad without liability to Contractor or to any other party for compensation or damages.

B. The foregoing grant is also subject to all outstanding superior rights (whether recorded or unrecorded and including those in favor of licensees and lessees of Railroad's property, and others) and the right of Railroad to renew and extend the same, and is made without covenant of title or for quiet enjoyment.

Section 3. <u>NO INTERFERENCE WITH OPERATIONS OF RAILROAD AND ITS TENANTS</u>.

A. Contractor shall conduct its operations so as not to interfere with the continuous and uninterrupted use and operation of the railroad tracks and property of Railroad, including without limitation, the operations of Railroad's lessees, licensees or others, unless specifically authorized in advance by the Railroad Representative. Nothing shall be done or permitted to be done by Contractor at any time that would in any manner impair the safety of such operations. When not in use, Contractor's machinery and materials shall be kept at least twenty-five (25) feet from the centerline of Railroad's nearest track, and there shall be no vehicular crossings of Railroads tracks except at existing open public crossings.

B. Operations of Railroad and work performed by Railroad personnel and delays in the Work to be performed by Contractor caused by such railroad operations and Work are expected by Contractor, and Contractor agrees that Railroad shall have no liability to Contractor, or any other person or entity for any such delays. The Contractor shall coordinate its activities with those of Railroad and third parties so as to avoid interference with railroad operations. The safe operation of Railroad train movements and other activities by Railroad takes precedence over any Work to be performed by Contractor.

Docusign Envelope ID: D24B0E46-A040-4DCF-9159-2076E4A3664D

Section 4. LIENS.

Contractor shall pay in full all persons who perform labor or provide materials for the Work to be performed by Contractor. Contractor shall not create, permit or suffer any mechanic's or materialmen's liens of any kind or nature to be created or enforced against any property of Railroad for any such Work performed. Contractor shall indemnify and hold harmless Railroad from and against any and all liens, claims, demands, costs or expenses of whatsoever nature in any way connected with or growing out of such Work done, labor performed, or materials furnished. If Contractor fails to promptly cause any lien to be released of record, Railroad may, at its election, discharge the lien or claim of lien at Contractor's expense.

Section 5. PROTECTION OF FIBER OPTIC CABLE SYSTEMS.

A. Fiber optic cable systems may be buried on Railroad's property. Protection of the fiber optic cable systems is of extreme importance since any break could disrupt service to users resulting in business interruption and loss of revenue and profits. Contractor shall visit www.up.com/CBUD to complete and submit the required form to determine if fiber optic cable is buried anywhere on Railroad's property to be used by Contractor. If it is, Contractor will telephone the telecommunications company(ies) involved, make arrangements for a cable locator and, if applicable, for relocation or other protection of the fiber optic cable. Contractor shall not commence any Work until all such protection or relocation (if applicable) has been accomplished.

B. IN ADDITION TO OTHER INDEMNITY PROVISIONS IN THIS AGREEMENT, CONTRACTOR SHALL INDEMNIFY, DEFEND AND HOLD RAILROAD HARMLESS FROM AND AGAINST ALL COSTS, LIABILITY AND EXPENSE WHATSOEVER (INCLUDING, WITHOUT LIMITATION, ATTORNEYS' FEES, COURT COSTS AND EXPENSES) ARISING OUT OF ANY ACT OR OMISSION OF CONTRACTOR, ITS AGENTS AND/OR EMPLOYEES, THAT CAUSES OR CONTRIBUTES TO (1) ANY DAMAGE TO OR DESTRUCTION OF ANY TELECOMMUNICATIONS SYSTEM ON RAILROAD'S PROPERTY, AND/OR (2) ANY INJURY TO OR DEATH OF ANY PERSON EMPLOYED BY OR ON BEHALF OF ANY TELECOMMUNICATIONS COMPANY, AND/OR ITS CONTRACTOR, AGENTS AND/OR EMPLOYEES, ON RAILROAD'S PROPERTY. CONTRACTOR SHALL NOT HAVE OR SEEK RECOURSE AGAINST RAILROAD FOR ANY CLAIM OR CAUSE OF ACTION FOR ALLEGED LOSS OF PROFITS OR REVENUE OR LOSS OF SERVICE OR OTHER CONSEQUENTIAL DAMAGE TO A TELECOMMUNICATION COMPANY USING RAILROAD'S PROPERTY OR A CUSTOMER OR USER OF SERVICES OF THE FIBER OPTIC CABLE ON RAILROAD'S PROPERTY.

Section 6. PERMITS - COMPLIANCE WITH LAWS.

In the prosecution of the Work covered by this agreement, Contractor shall secure any and all necessary permits and shall comply with all applicable federal, state and local laws, regulations and enactments affecting the Work including, without limitation, all applicable Federal Railroad Administration regulations.

Section 7. SAFETY.

A. Safety of personnel, property, rail operations and the public is of paramount importance in the prosecution of any Work on Railroad property performed by Contractor. Contractor shall be responsible for initiating, maintaining and supervising all safety, operations and programs in connection with the Work. Contractor shall, at a minimum, comply with Railroad's then current safety standards located at the below web address ("Railroad's Safety Standards") to ensure uniformity with the safety standards followed by Railroad's own forces. As a part of Contractor's safety responsibilities, Contractor shall notify Railroad if Contractor

determines that any of Railroad's Safety Standards are contrary to good safety practices. Contractor shall furnish copies of Railroad's Safety Standards to each of its employees before they enter Railroad property.

http://www.up.com/cs/groups/public/@uprr/@suppliers/documents/up_pdf_nativedocs/pdf_up_supplier_safety_req.pdf

B. All personnel employed by the Agency, Contractor and all subcontractors must complete the Railroad's course "Property Access Training" and be registered prior to working on Railroad property. This training is available at www.up.com/up-pat. This training is required to be completed annually.

C. Without limitation of the provisions of paragraph A above, Contractor shall keep the job site free from safety and health hazards and ensure that its employees are competent and adequately trained in all safety and health aspects of the job.

D. Contractor shall have proper first aid supplies available on the job site so that prompt first aid services may be provided to any person injured on the job site. Contractor shall promptly notify Railroad of any U.S. Occupational Safety and Health Administration reportable injuries. Contractor shall have a nondelegable duty to control its employees while they are on the job site or any other property of Railroad, and to be certain they do not use, be under the influence of, or have in their possession any alcoholic beverage, drug or other substance that may inhibit the safe performance of any Work.

E. If and when requested by Railroad, Contractor shall deliver to Railroad a copy of Contractor's safety plan for conducting the Work (the "Safety Plan"). Railroad shall have the right, but not the obligation, to require Contractor to correct any deficiencies in the Safety Plan. The terms of this agreement shall control if there are any inconsistencies between this agreement and the Safety Plan.

Section 8. INDEMNITY.

A. TO THE FULLEST EXTENT ALLOWED BY APPLICABLE LAW, CONTRACTOR SHALL INDEMNIFY, DEFEND AND HOLD HARMLESS RAILROAD, ITS AFFILIATES, AND ITS AND THEIR OFFICERS, AGENTS AND EMPLOYEES (INDIVIDUALLY AN "INDEMNIFIED PARTY" OR COLLECTIVELY "INDEMNIFIED PARTIES") FROM AND AGAINST ANY AND ALL LOSS, DAMAGE, INJURY, LIABILITY, CLAIM, DEMAND, COST OR EXPENSE (INCLUDING, WITHOUT LIMITATION, ATTORNEY'S, CONSULTANT'S AND EXPERT'S FEES, AND COURT COSTS), FINE OR PENALTY (COLLECTIVELY, "LOSS") INCURRED BY ANY PERSON (INCLUDING, WITHOUT LIMITATION, ANY INDEMNIFIED PARTY, CONTRACTOR, OR ANY EMPLOYEE OF CONTRACTOR OR OF ANY INDEMNIFIED PARTY) ARISING OUT OF OR IN ANY MANNER CONNECTED WITH (I) ANY WORK PERFORMED BY CONTRACTOR, OR (II) ANY ACT OR OMISSION OF CONTRACTOR, ITS OFFICERS, AGENTS OR EMPLOYEES, OR (III) ANY BREACH OF THIS AGREEMENT BY CONTRACTOR.

B. THE RIGHT TO INDEMNITY UNDER THIS SECTION 8 SHALL ACCRUE UPON OCCURRENCE OF THE EVENT GIVING RISE TO THE LOSS, AND SHALL APPLY REGARDLESS OF ANY NEGLIGENCE OR STRICT LIABILITY OF ANY INDEMNIFIED PARTY, EXCEPT WHERE THE LOSS IS CAUSED BY THE SOLE ACTIVE NEGLIGENCE OF AN INDEMNIFIED PARTY AS ESTABLISHED BY THE FINAL JUDGMENT OF A COURT OF COMPETENT JURISDICTION. THE SOLE ACTIVE NEGLIGENCE OF ANY INDEMNIFIED PARTY SHALL NOT BAR THE RECOVERY OF ANY OTHER INDEMNIFIED PARTY.

C. CONTRACTOR EXPRESSLY AND SPECIFICALLY ASSUMES POTENTIAL LIABILITY UNDER THIS SECTION 8 FOR CLAIMS OR ACTIONS BROUGHT BY CONTRACTOR'S OWN EMPLOYEES. CONTRACTOR WAIVES ANY IMMUNITY IT MAY HAVE UNDER WORKER'S COMPENSATION OR INDUSTRIAL INSURANCE ACTS TO INDEMNIFY THE INDEMNIFIED PARTIES UNDER THIS SECTION 8.

Docusign Envelope ID: D24B0E46-A040-4DCF-9159-2076E4A3664D

CONTRACTOR ACKNOWLEDGES THAT THIS WAIVER WAS MUTUALLY NEGOTIATED BY THE PARTIES HERETO.

D. NO COURT OR JURY FINDINGS IN ANY EMPLOYEE'S SUIT PURSUANT TO ANY WORKER'S COMPENSATION ACT OR THE FEDERAL EMPLOYERS' LIABILITY ACT AGAINST A PARTY TO THIS AGREEMENT MAY BE RELIED UPON OR USED BY CONTRACTOR IN ANY ATTEMPT TO ASSERT LIABILITY AGAINST ANY INDEMNIFIED PARTY.

E. THE PROVISIONS OF THIS SECTION 8 SHALL SURVIVE THE COMPLETION OF ANY WORK PERFORMED BY CONTRACTOR OR THE TERMINATION OR EXPIRATION OF THIS AGREEMENT. IN NO EVENT SHALL THIS SECTION 8 OR ANY OTHER PROVISION OF THIS AGREEMENT BE DEEMED TO LIMIT ANY LIABILITY CONTRACTOR MAY HAVE TO ANY INDEMNIFIED PARTY BY STATUTE OR UNDER COMMON LAW.

Section 9. RESTORATION OF PROPERTY.

In the event Railroad authorizes Contractor to take down any fence of Railroad or in any manner move or disturb any of the other property of Railroad in connection with the Work to be performed by Contractor, then in that event Contractor shall, as soon as possible and at Contractor's sole expense, restore such fence and other property to the same condition as the same were in before such fence was taken down or such other property was moved or disturbed. Contractor shall remove all of Contractor's tools, equipment, rubbish and other materials from Railroad's property promptly upon completion of the Work, restoring Railroad's property to the same state and condition as when Contractor entered thereon.

Section 10. WAIVER OF DEFAULT.

Waiver by Railroad of any breach or default of any condition, covenant or agreement herein contained to be kept, observed and performed by Contractor shall in no way impair the right of Railroad to avail itself of any remedy for any subsequent breach or default.

Section 11. MODIFICATION - ENTIRE AGREEMENT.

No modification of this agreement shall be effective unless made in writing and signed by Contractor and Railroad. This agreement and the exhibits attached hereto and made a part hereof constitute the entire understanding between Contractor and Railroad and cancel and supersede any prior negotiations, understandings or agreements, whether written or oral, with respect to the Work to be performed by Contractor.

Section 12. ASSIGNMENT - SUBCONTRACTING.

Contractor shall not assign or subcontract this agreement, or any interest therein, without the written consent of the Railroad. Contractor shall be responsible for the acts and omissions of all subcontractors. Before Contractor commences any Work, the Contractor shall, except to the extent prohibited by law; (1) require each of its subcontractors to include the Contractor as "Additional Insured" on the subcontractor's Commercial General Liability policy and Umbrella or Excess policies (if applicable) with respect to all liabilities arising out of the subcontractor's performance of Work on behalf of the Contractor by endorsing these policies with ISO Additional Insured Endorsements CG 20 10, and CG 20 37 (or substitute forms providing equivalent coverage; (2) require each of its subcontractors to endorse their Commercial General Liability Policy with "Contractual Liability Railroads" ISO Form CG 24 17 10 01 (or a substitute form providing equivalent coverage) for the job site; and (3) require each of its subcontractors to endorse their Business Automobile Policy with "Coverage For Certain Operations In Connection With Railroads" ISO Form CA 20 70 10 01 (or a substitute form providing equivalent coverage) for the job site.

Docusign Envelope ID: D24B0E46-A040-4DCF-9159-2076E4A3664D

EXHIBIT C
TO
CONTRACTOR'S
RIGHT OF ENTRY AGREEMENT

Union Pacific Railroad Company
Insurance Requirements For
Contractor's Right of Entry Agreement

During the entire term of this Agreement and course of the Project, and until all Project Work on Railroad's property has been completed and all equipment and materials have been removed from Railroad's property and Railroad's property has been clean and restored to Railroad's satisfaction, Contractor shall, at its sole cost and expense, procure and maintain the following insurance coverage:

A. **Commercial General Liability** insurance. Commercial general liability (CGL) with a limit of not less than $5,000,000 each occurrence and an aggregate limit of not less than $10,000,000. CGL insurance must be written on ISO occurrence form CG 00 01 12 04 (or a substitute form providing equivalent coverage).

The policy must also contain the following endorsement, which must be stated on the certificate of insurance:

- Contractual Liability Railroads ISO form CG 24 17 10 01 (or a substitute form providing equivalent coverage) showing "Union Pacific Railroad Company Property" as the Designated Job Site.
- Designated Construction Project(s) General Aggregate Limit ISO Form CG 25 03 03 97 (or a substitute form providing equivalent coverage) showing the project on the form schedule.

B. **Business Automobile Coverage** insurance. Business auto coverage written on ISO form CA 00 01 10 01 (or a substitute form providing equivalent liability coverage) with a combined single limit of not less $5,000,000 for each accident and coverage must include liability arising out of any auto (including owned, hired and non-owned autos).

The policy must contain the following endorsements, which must be stated on the certificate of insurance:

- Coverage For Certain Operations In Connection With Railroads ISO form CA 20 70 10 01 (or a substitute form providing equivalent coverage) showing "Union Pacific Property" as the Designated Job Site.
- Motor Carrier Act Endorsement - Hazardous materials clean up (MCS-90) if required by law.

C. **Workers' Compensation and Employers' Liability** insurance. Coverage must include but not be limited to:

- Contractor's statutory liability under the workers' compensation laws of the state where the Work is being performed.
- Employers' Liability (Part B) with limits of at least $500,000 each accident, $500,000 disease policy limit $500,000 each employee.

If Contractor is self-insured, evidence of state approval and excess workers compensation coverage must be provided. Coverage must include liability arising out of the U. S. Longshoremen's and Harbor Workers' Act, the Jones Act, and the Outer Continental Shelf Land Act, if applicable.

D. **Railroad Protective Liability** insurance. Contractor must maintain "Railroad Protective Liability" (RPL) insurance written on ISO occurrence form CG 00 35 12 04 (or a substitute form providing equivalent coverage) on behalf of Railroad as named insured, with a limit of not less than $2,000,000 per occurrence

Docusign Envelope ID: D24B0E46-A040-4DCF-9159-2076E4A3664D

and an aggregate of $6,000,000. The definition of "JOB LOCATION" and "WORK" on the declaration page of the policy shall refer to this agreement and shall describe all WORK or OPERATIONS performed under this agreement. Contractor shall provide this agreement to Contractor's insurance agent(s) and/or broker(s) and Contractor shall instruct such agent(s) and/or broker(s) to procure the insurance coverage required by this agreement. A BINDER STATING THE POLICY IS IN PLACE MUST BE SUBMITTED TO RAILROAD BEFORE THE WORK MAY COMMENCE AND UNTIL THE ORIGINAL POLICY IS FORWARDED TO UNION PACIFIC RAILROAD.

E. **Umbrella or Excess** insurance. If Contractor utilizes umbrella or excess policies, these policies must "follow form" and afford no less coverage than the primary policy.

F. **Pollution Liability** insurance**.** Pollution liability coverage must be included when the scope of the Work as defined in the agreement includes installation, temporary storage, or disposal of any "hazardous" material that is injurious in or upon land, the atmosphere, or any watercourses; or may cause bodily injury at any time.

If required, coverage may be provided in separate policy form or by endorsement to Contractors CGL or RPL. Any form coverage must be equivalent to that provided in ISO form CG 24 15 "Limited Pollution Liability Extension Endorsement" or CG 28 31 "Pollution Exclusion Amendment" with limits of at least $5,000,000 per occurrence and an aggregate limit of $10,000,000.

If the scope of Work as defined in this agreement includes the disposal of any hazardous or non-hazardous materials from the job site, Contractor must furnish to Railroad evidence of pollution legal liability insurance maintained by the disposal site operator for losses arising from the insured facility accepting the materials, with coverage in minimum amounts of $1,000,000 per loss, and an annual aggregate of $2,000,000.

Other Requirements

G. All policy(ies) required above (except business automobile, worker's compensation and employers liability) must include Railroad as "Additional Insured" using ISO Additional Insured Endorsements CG 20 10, and CG 20 37 (or substitute forms providing equivalent coverage). The coverage provided to Railroad as additional insured shall not be limited by Contractor's liability under the indemnity provisions of this agreement. BOTH CONTRACTOR AND RAILROAD EXPECT THAT UNION PACIFIC RAILROAD COMPANY WILL BE PROVIDED WITH THE BROADEST POSSIBLE COVERAGE AVAILABLE BY OPERATION OF LAW UNDER ISO ADDITIONAL INSURED FORMS CG 20 10 AND CG 20 37.

H. Punitive damages exclusion, if any, must be deleted (and the deletion indicated on the certificate of insurance), unless (a) insurance coverage may not lawfully be obtained for any punitive damages that may arise under this agreement, or (b) all punitive damages are prohibited by all states in which this agreement will be performed.

I. Contractor waives all rights of recovery, and its insurers also waive all rights of subrogation of damages against Railroad and its agents, officers, directors and employees for damages covered by the workers compensation and employers liability or commercial umbrella or excess liability obtained by Contractor required in this agreement where prohibited by law. This waiver must be stated on the certificate of insurance.

J. Prior to commencing the Work, Contractor shall furnish Railroad with a certificate(s) of insurance, executed by a duly authorized representative of each insurer, showing compliance with the insurance requirements in this agreement.

Docusign Envelope ID: D24B0E46-A040-4DCF-9159-2076E4A3664D

K. All insurance policies must be written by a reputable insurance company acceptable to Railroad or with a current Best's Insurance Guide Rating of A- and Class VII or better, and authorized to do business in the state where the Work is being performed.

L. The fact that insurance is obtained by Contractor or by Railroad on behalf of Contractor will not be deemed to release or diminish the liability of Contractor, including, without limitation, liability under the indemnity provisions of this agreement. Damages recoverable by Railroad from Contractor or any third party will not be limited by the amount of the required insurance coverage.

2-J CONSIDERATION AND AUTHORIZATION TO UTILIZE JOB ORDER CONTRACT VIA COOPERATIVE TIPS PURCHASING CONTRACT # 2401402 FOR THE DEMOLITION OF RESIDENTIAL DOORS AND REPLACEMENT WITH HOLLOW METAL DOORS AND FRAMES WITH BADGE ACCESS TO THE CAMERON COUNTY REGIONAL MOBILITY AUTHORITY TOLL OPERATIONS BUILDING.

CAMERON COUNTY REGIONAL MOBILITY AUTHORITY

CONTRACT FOR TOLLS OPERATIONS BUILDING DOOR IMPROVEMENTS

****

This Contract between the Cameron County Regional Mobility Authority (the "CCRMA") and Spaw Glass Contractors, Inc. (the "Contractor") is hereby entered into and agreed to as of the 29th day of May, 2025, (the "Effective Date") and the parties agree to certain terms and conditions, as follows:

1.0 Definitions

1.1 CCRMA. Any reference herein to the "CCRMA" or "CCRMA's Representative" or "CCRMA's Construction Manager" shall be interpreted to mean the same as:

Cameron County Regional Mobility Authority

3461 Carmen Ave.

Rancho Viejo, Texas 78575

1.2 Contractor. Any reference herein to the "Contractor" shall be interpreted to mean the same as:

Spaw Glass Contractors, Inc.

3008 W. Spur 54

Harlingen, Texas 78552

1.3 Project. Any reference herein to the "Project" shall be interpreted to mean the hollow metal door improvements to the Cameron County Regional Mobility Authority's Tolls Operations Building.

1.4 Contract. The Contract is comprised of this Contract, the Exhibits listed and referenced herein, and all formal changes to any of those documents by addendum, change order, or other modification.

1.5 The Contract Documents. The Contract Documents consist of this document, the Contractor's Proposal, Change Orders, Addendums, and Supplemental Agreements, and all other Exhibits listed and referenced herein. This Contract is intended to be an integral whole and shall be interpreted as internally consistent. Work required by any page, part, or portion of the Contract shall be deemed to be Work required for the Project as if called

for in the whole Contract and no claim for extra work shall be based upon the fact that the description of the Work in question is incomplete.

1.6 **Work.** Any reference herein to the "Work" shall be interpreted to mean any work required for the Contractor to satisfactorily perform and complete the Project.

1.7 **Provision of All Things Required.** Anything that may be required, implied or inferred by the Contract Documents which make up this Contract, or any one or more of them, shall be provided by the Contractor for the Contract Price.

1.8 **Privity only with the Contractor.** Nothing contained in this Contract shall create, nor be interpreted to create privity or any other relationship whatsoever between the CCRMA and any person except the Contractor and the Contractor's successors, executors, administrators, and assigns.

1.9 **"Include" Intended to be Encompassing.** "Include", "includes", or "including", as used in the Contract, shall be deemed in all cases to be followed by the phrase, "without limitation."

1.10 **Use of Singular and Plural.** Words or terms used as nouns in the Contract shall be inclusive of their singular and plural forms, unless the context of their usage clearly requires a contrary meaning.

1.11 **Definition of Material Breaches not Exhaustive.** The specification herein of any act, failure, refusal, omission, event, occurrence or condition as constituting a material breach of the Contract shall not imply that any other, non-specified act, failure, refusal, omission, event, occurrence or condition shall be deemed not to constitute a material breach of the Contract.

2.0 Purpose

This Contract is for the provision of specified job order contracting services with Contractor under TIPS Spaw Glass Contract ID 2401402 and to be performed in accordance with Texas Government Code, Chapter 2269, Subchapter I, and as requested by the CCRMA in accordance with the terms of this Contract.

3.0 Contractor's Representations

In order to induce the CCRMA to execute this Contract and recognizing that the CCRMA is relying thereon, the Contractor, by executing this Contract, and without superseding, limiting, or restricting any other representation or warranty set forth elsewhere in this Contract, or implied by operation of law, makes the following express representations to the CCRMA:

3.1 The Contractor is fully qualified to perform the Work. The Contractor is registered with the State of Texas.

3.2 The Contractor will maintain all necessary licenses, permits or other authorizations necessary for the Work until the Contractor's duties under this Contract have been fully satisfied.

3.3 The Contractor has the expertise, experience, and knowledge as well as the necessary team, personnel, and financial capability to perform the Work in accordance with the terms of this Contract.

3.4 Prior to the execution of this Contract, the Contractor has visited and inspected the Project site and is familiar with the local conditions under which the Work is to be performed. The Contractor has reviewed the CCRMA's concerns, if any, as are necessary to determine the conditions under which the Work will be performed, and the Contractor accepts the conditions of the Project site and has taken those conditions into account in entering into this Contract.

3.5 The Contractor assumes full responsibility to the CCRMA for the improper acts and omissions of its Subcontractors or others employed or retained by Contractor in connection with the Work.

3.6 The Contractor shall be solely responsible for providing supervision and oversight to all of the Contractor's personnel.

3.7 The Contractor agrees to submit a status report to the Authority at least one (1) time every ten (10) business days during the term of this Contract in addition to the scheduling and reporting requirements under the Contract.

3.8 The Contractor warrants and represents that it will assign only qualified personnel to perform the services outlined herein and within the Contract Documents. For the purposes of the Contract, the term "qualified personnel" shall mean those personnel that have been investigated, tested and trained in the manner described within the Contract and, as proposed by the Contractor within its bid or as provided by the Contractor during the Contractor's normal conduct of business.

4.0 Contract Time.

4.1 **Notice of Commencement.** After the CCRMA has approved the Contract Documents for the Project and is otherwise prepared for the Contractor to proceed with the Work, as determined by the CCRMA in its sole and absolute discretion, the CCRMA shall issue a notice to commence the Work directing the Contractor to proceed with the Work on the date indicated in the notice (the "Commencement Date").

4.2 **Time for Completion.** The Contractor shall commence the Work on the Commencement Date, and the Work shall be carried out regularly and without interruption. The Contractor shall substantially complete the Work not later than sixty (60) calendar days after the Commencement Date, or such other date as may by Change Order be designated (the "Scheduled Completion Date"). The number of working days between the effective date

of the Contract and the Scheduled Completion Date is the "Contract Time." The time set forth for completion of the Job Order Project is a material term of the Project.

4.2.1 Unless otherwise described herein, all references to "days" shall be calendar days (in the case that the last day falls on a Saturday, Sunday, or legal holiday, then the period of time shall automatically extend to include the next work day).

5.0 Contract Price

5.1 The total not-to-exceed (NTE) value of the Contract is the amount of **THIRTY-SIX THOUSAND FOUR HUNDRED FORTY-SEVEN AND 43/100 DOLLARS ($36,447.43)** to be paid in accordance with the provisions herein. The Contractor exceeds the NTE amount at its own risk. The CCRMA reserves the right to amend this amount (increase/decrease) at any time during the Contract when the CCRMA determines, in its sole and absolute discretion, that doing so is in its best interests.

6.0 Contractor-Specific Job Order Requirements

6.1 In General. Contractor agrees to provide specific construction services for the Project as requested by the CCRMA in accordance with the terms of this Contract. Contractor shall furnish all of the materials and perform all of the Work shown on the drawings and described in the specifications associated with the Project with the exception of equipment to be provided by third parties. The Project Architect, if used on the Project, shall be as specified in the individual Project Scope of Work. Contractor shall do everything required by this Contract, the Uniform General, and Supplementary Conditions, any Additional General or Special Conditions of the Contract, the Addenda, the Specifications and Drawings for this Job Order Project and any other requirements incorporated into this Contract by reference either as part of the Contract Documents or otherwise.

6.2 Project Manager. Contractor shall manage the Work for the Project authorized pursuant to this Contract. Contractor shall provide all of the materials and perform all of the Work as described in the Contractor's Proposal attached hereto as **Exhibit 1** and incorporated by reference (the "Contractor's Proposal").

6.3 Standard of Care: Contractor agrees to use its best efforts, skill, judgment, and abilities to perform the Work in an expeditious and timely manner as is consistent with the orderly progress of the Project authorized pursuant to this Contract. Contractor shall at all times provide a sufficient number of qualified personnel to accomplish the Work within the time limits set forth in the schedule.

6.4 Compliance with Laws. Contractor shall endeavor to perform the Work in compliance with all applicable national, federal, state, municipal, and State of Texas laws, regulations, codes, ordinances, orders and with those of any other body having jurisdiction over the Project.

6.5 Existing Conditions. Contractor shall use reasonable efforts to verify the accuracy and suitability of any drawings, plans, sketches, instructions, information, requirements,

procedures, requests for action, and other data supplied to Contractor by the CCRMA, Cameron County, or any other party, that Contractor uses for the Project.

6.6 Correction of Work. Contractor shall promptly correct any known or discovered error, omission, or other defect in the Work without any additional cost or expense to CCRMA.

6.7 Phasing. Contractor shall not proceed beyond any previously authorized phase of the Work for the Project unless first authorized by the CCRMA in writing, except at the Contractor's own financial risk. Applicable phases of the Scope of Work shall be identified in the Project Proposal.

6.8 Representative. Contractor shall designate a representative primarily responsible for the Work under this Contract. The designated representative shall act on behalf of Contractor with respect to all phases of the Work and shall be available as required for the benefit of the CCRMA. The designated representative shall not be changed without prior approval of the CCRMA, which approval shall not be unreasonably withheld.

6.9 Documentation. Contractor shall fully document its project activities, in drawings, reports or other methods as appropriate to the Scope of Work and as identified in the Project Proposal. The Contractor shall bear the cost of providing all plans, specifications and other documents used by the Contractor and its consultants.

6.10 Project Cost Estimating. The Contractor will obtain and use R.S. MEANS Facilities Construction Cost Data, Latest Edition.

6.11 Warranty of Title. No material, supplies, or equipment to be installed or furnished under this Contract shall be purchased subject to any chattel mortgage or under a conditional sale, lease-purchase or other agreement by which an interest is retained by the seller or supplier. Contractor shall warrant good title to all materials, supplies, and equipment installed or incorporated in the work and upon completion of all work, shall deliver the same together with all improvements and appurtenances constructed or placed by him to the CCRMA free from any claims, liens, or charges. Neither the Contractor, nor any person, firm, or corporation furnishing any material or labor for any work covered by this Contract shall have any right to a lien upon any improvement or appurtenance. Nothing contained in this paragraph, however, shall defeat or impair the right of persons furnishing materials or labor to recover under any law permitting such persons to look to funds due the Contractor in the hands of the CCRMA. The provisions of this paragraph shall be inserted in all subcontracts and material contracts and notice of its provisions shall be given to all persons furnishing materials for the work when no formal contract is entered into for such materials. This provision shall survive any expiration or termination of the Contract.

6.12 Warranty of Workmanship and Materials. The Contractor warrants and guarantees to the CCRMA that all labor furnished to perform the Work under the Contract shall be competent to perform the tasks undertaken, that the product of such labor yield only first-class results in compliance with the Contract, that materials and equipment furnished shall be of high quality and new unless otherwise permitted by the Contract, and that the Work

shall be of high quality free from faults and defects and in conformance with the Contract and shall be protected by the Contractor's warranties in the Contractor's Proposal. Any warranties otherwise received by the Contractor for any materials shall be assigned to the CCRMA. Neither the final certificate of payment nor any provision in the Contract nor partial or entire use of the improvements included in this Contract by the CCRMA or the public shall constitute an acceptance of work not done in accordance with the Contract or relieve the Contractor of liability in respect to any express warranties or responsibility for faulty materials or workmanship. The Contractor shall promptly remedy any defects in the work and pay for any damage to other work resulting therefrom which shall appear within a period of twelve (12) months from the date of final acceptance of the Work, except where a longer period is specified.

6.13 Prohibition Against Liens. The Contractor is prohibited from placing a lien on the subject property. This prohibition shall apply to all subcontractors at any tier and all materials suppliers.

7.0 CCRMA's Obligations

7.1 Project Scope of Work. CCRMA provided the Project Scope of Work as described in the Contractor's Proposal for the basic services to be provided by the Contractor for this Project.

7.2 Representative. CCRMA is Cameron County's designated representative authorized to act on Cameron County's behalf with respect to the Project. Contractor shall coordinate its work solely through the designated representative. CCRMA or its designee is the designated representative for the purpose of administering this Contract and any dispute resolution procedures.

7.3 Special Information. CCRMA shall furnish available property, boundary, easement, right-of-way, topographic and utility surveys; plans and specifications; and special data and conditions relevant to the Project. CCRMA shall furnish other special investigations of the Project site as requested by the Contractor and as reasonably necessary for the Project. Contractor shall exercise reasonable care in relying upon this information in the performance of its services under this Contract. CCRMA makes no warranties or representations as to the accuracy or suitability of information provided to the Contractor by CCRMA or by others, and the Contractor assumes any liability related to its reliance on that information.

7.4 Entry on Land. CCRMA shall assist Contractor in gaining entry to the property as necessary for Contractor to perform its services under this Contract.

7.5 Review of Work. The CCRMA will review the Work in progress as appropriate. The CCRMA will notify the Contractor in writing of any material error or omission or other defect in the Work or any conflict in the Contract Documents that the CCRMA becomes aware of and has actual knowledge of, but CCRMA shall have no obligation or duty to investigate whether such faults, defects, or conflicts exist as such obligation or duty is the sole responsibility of the Contractor.

7.6 **Time for Response.** The CCRMA shall furnish required information and services and shall render approvals and decisions as reasonably expeditiously as necessary for the orderly progress of the Contractor's services and of the Work.

7.7 The CCRMA's agreement not to exercise, or its delay or failure to exercise, any right under the Contract or to require strict compliance with any obligation of the Contractor under the Contract shall not be a waiver of the right to exercise such right or to insist on such compliance at any other time or on any other occasion.

8.0 Acceptance of Work

8.1 **CCRMA's Satisfaction.** All Work performed under this Contract shall be completed to the satisfaction of the CCRMA. The CCRMA shall decide all questions regarding Contractor's performance under the Contract in the CCRMA's sole and absolute discretion, and such decisions shall be final and conclusive.

8.2 **Correction of Work.** Should Contractor's Work not conform to the requirements of this Contract and the Project requirements as determined by the CCRMA, the CCRMA may order the Contractor to correct the Work at no additional expense to the CCRMA or deduct the cost of correcting the Work from any other monies payable to the Contractor.

8.3 **Liability.** The CCRMA's approval or acceptance of Contractor's Work will not release Contractor from any liability for any defects in the Work.

9.0 Cost Proposals

9.1 **Required for Project.** Contractor shall prepare a cost proposal for the Project requested by the CCRMA. The cost proposal shall identify the pre-priced items, the non-pre-priced items, and any other costs proposed to be included in the cost of the Work for the Project.

9.2 **Pre-priced Items.** Pre-priced items are pre-described and pre-priced tasks based on a unit price guide and coefficient multiplier. The cost proposal for the Project should be based substantially on the use of pre-priced items.

9**.2.1** The **Unit Price Guide** is a compilation of real property repair, rehabilitation, alteration, maintenance, and minor construction tasks, along with associated units of measure and unit prices designated or provided by the CCRMA to be used in administration of this Contract. Unit prices include direct material, labor and equipment cost, but not indirect costs or profit. The Unit Price Guide for this Contract is: "R.S. MEANS Facilities Construction Cost Data, Latest Edition, the City Cost Index (CCI) applied to costs. The unit cost estimate is for the City of McAllen" – Region 1, which is hereby incorporated by reference.

9.2.2 The **Coefficient Multiplier** is a numerical factor which is applied to the Unit Price Guide unit prices to cover all of the Contractor's other costs in performing the Work of a Project including but not limited to, general and administrative and other overhead costs, insurance costs, incidental equipment rental, protective gear and

clothing, contingencies such as changes in wage rates and inflation, Contractor's profit, and indirect costs. Separate coefficients may be used for Work performed during normal working hours and for Work performed during non-normal working hours. The Coefficient Multipliers for this Contract is as identified in the Job Order Contracting Agreement with ESC Region Three (3) and is known to be .870.

9.3 Non-Pre-priced Items. Non-Pre-priced items are the necessary, but incidental, parts of a Project that are not susceptible to unit pricing using the pre-priced tasks in the Unit Price Guide. The proposed cost of all non-pre-priced items in the cost proposal shall include all Contractor cost items otherwise included in the coefficient multiplier used for pre-priced items. No coefficient multiplier shall be applied to non-pre-priced items. Non-pre-priced items shall not exceed ten percent (10%) of the Contract Price for a Project.

9.4 **Other Costs.** Extraordinary costs that are unique to a specific Project and not generally or reasonably included in the coefficient multiplier may be added only if authorized or confirmed in writing by the CCRMA. Such extraordinary costs may be calculated as a lump sum for the Project or on a "Not to Exceed" basis.

10.0 Payment

10.1 Partial Payments. The Contractor shall prepare its requisition for partial payment as of the last day of the month and submit it with the required number of copies, to the CCRMA's Construction Manager for approval. The amount of the payment due the Contractor shall be determined by adding to the total value of work completed to date, the value of materials properly stored on the site and deducting (1) five percent (5%) of the total amount, to be retained until final payment and (2) the amount of all previous payments. The total value of work completed to date shall be based on the estimated quantities of work completed and on the unit prices contained in the Contract. The value of materials properly stored on the site shall be based upon the estimated quantities of such materials and the invoice prices. Copies of all invoices shall be available for inspection by the CCRMA's Construction Manager.

Monthly or partial payments made by the CCRMA to the Contractor are monies advanced for the purpose of assisting the contractor to expedite the work of construction. The Contractor shall be responsible for the care and protection of all materials and work upon which payments have been made until final acceptance of such work and materials by the CCRMA. Such payments shall not constitute a waiver of the right of the CCRMA to require the fulfillment of all terms of the Contract and the delivery of all improvements embraced in this Contract complete and satisfactory to the CCRMA.

10.2 Final Payment. After final inspection and acceptance by the CCRMA of all work under the Contract, the Contractor shall prepare his requisition for final payment which shall be based upon the careful inspection of each item of work at the applicable unit prices stipulated in the Contract. The total amount of the final payment due the Contractor under this Contract shall be the amount computed as described above less all previous payments.

The CCRMA before paying the final estimate, shall require the Contractor to furnish releases or receipts from all subcontractors having performed any work and all persons having supplied materials, equipment (installed on the Project) and services to the Contractor, if the CCRMA deems it necessary in order to protect its interest. The CCRMA may, if it deems such action advisable, make payment in part or in full to the Contractor without requiring the furnishing of such releases or receipts and any payments made shall in no way impair the obligations of any surety or sureties furnished under this Contract.. Any amount due the CCRMA under Liquidated Damages, shall be deducted from the final payment due the Contractor.

10.3 **Payments Subject to Submission of Certificates.** Each payment to the Contractor by the CCRMA shall be made subject to submission by the Contractor of all written certifications required of him and his subcontractors.

10.4 **Withholding Payments.** The CCRMA may withhold from any payment due the Contractor whatever is deemed necessary to protect the CCRMA, and if so elects, may also withhold any amounts due from the Contractor to any subcontractors or material dealers, for work performed or material furnished by them. The foregoing provisions shall be construed solely for the benefit of the CCRMA and will not require the CCRMA to determine or adjust any claims or disputes between the Contractor and his subcontractors or material dealers, or to withhold any moneys for their protection unless the CCRMA elects to do so. The failure or refusal of the CCRMA to withhold any monies from the Contractor shall in no way impair the obligations of any surety or sureties under any bond furnished under this Contract.

10.5 **Liquidated Damages.** The CCRMA and Contractor agree that One Hundred Dollars and No/100ths ($100.00) will be deducted from the Project Cost for each consecutive calendar day after the completion date established by the Notice to Proceed that any Work, including the correction of deficiencies found during the final testing and inspection, is not completed. This amount will be deducted not as a penalty but as liquidated damages representing the parties' estimate at the time of contract execution of the damages which the CCRMA and/or Cameron County will sustain for late completion.

11.0 **Abandonment By Contractor**

11.1 In case the Contractor should abandon or fail to resume work within ten (10) calendar days after written notification from the CCRMA's representative or the Engineer, or the Contractor fails to comply with the orders of the Engineer when such orders are consistent with this contract or this Contract or with the specifications hereto attached, then and in that case, the Surety on any bond shall be notified in writing and directed to complete the work, and a copy of said notice shall be delivered to the Contractor.

11.2 After receiving said notice of abandonment, the Contractor shall not remove from the work any machinery, equipment, tools, materials or supplies then on the job, but the same, together with any materials and equipment under contract for work, may be held for use on

the work by the CCRMA or the Surety on any construction bond, or another Contractor, in completion of the work; and the Contractor shall not receive any rental or credit therefor (except when used in connection with extra work, where credit shall be allowed as provided for under "Extra Work"), it being understood that the use of such equipment and materials will ultimately reduce the cost to complete the work and be reflected in the final settlement.

11.3 In case the Surety should fail to commence compliance with the notice for completion herein before provided for within ten (10) days after services of such notice, then the CCRMA may provide for completion of the work in either of the following elective manners:

11.3.1 The CCRMA may employ such force of men and use such machinery, equipment, tools, materials and supplies as the CCRMA may deem necessary to complete the work and charge the expense of such labor, material, machinery, equipment, tools and supplies to said Contractor and the expense so charged shall be deducted and paid by the CCRMA out of such money as may be due, or that may thereafter at any time become due to the Contractor under and by virtue of this Contract. In case such expense is more than the sum which would have been payable under this Contract if the same had been completed by the Contractor, then the Contractor and/or his surety shall pay the amount of such excess to the CCRMA; or

11.3.2 The CCRMA, under sealed bids, after five (5) days notice published one or more times in a newspaper having a general circulation in the location of the work, may let a contract for the completion of the work under substantially the same terms and conditions which are provided in this contract. In case of any increase in cost to the CCRMA under the new contract as compared to what would have been the cost under this contract, such increase shall be charged to the Contractor and the Surety shall be and remain bound theretofore. When the work shall have been substantially completed the Contractor and his Surety shall be notified and Certificates of Completion and Acceptance shall be issued as provided herein above, a complete itemized statement of the contract accounts, certified to by the CCRMA's Construction Manager as being correct, shall then be prepared and delivered to the Contractor and his Surety, whereupon the Contractor and/or his Surety shall pay the balance due as reflected by said statement within twenty-one (21) days after the date of such Certificate of Completion.

11.4 In the event the statement of the account shows that the cost to complete the work is less than that which would have been the cost to the CCRMA had the work been completed by the Contractor under the terms of this contract and when the Contractor and/or his Surety shall pay the balance shown to be due by them to the CCRMA, then all machinery, equipment tools, materials or supplies left on the site of the work shall be turned over to the Contractor and/or his Surety. Should the cost to complete the work exceed the contract price and the Contractor and/or his Surety fail to pay the amount due the CCRMA within the time designated hereinabove, and there remains any machinery, equipment, tools,

material or supplies on the site of the work, notice thereof, together with an itemized list of such equipment and materials, shall be mailed to the Contractor and his Surety at the respective addresses designated in this contract provided, however, that actual written notice given in any manner will satisfy this condition. After mailing or otherwise giving such notice, such property shall be held at the risk of the Contractor and his Surety subject only to the duty of the CCRMA to exercise ordinary care to protect such property. After fifteen (15) days from the date of said notice the CCRMA may sell such machinery, equipment, tools, materials or supplies and apply the net sum derived from such sale to the credit of the Contractor, as the CCRMA may elect.

11.5 The CCRMA shall release any machinery, equipment, tools, materials or supplies, which remain on the work and belong to persons other than the Contractor or his Surety, to their proper Localities without notice to the Contractor.

12.0 Dispute Resolution

Government Code Chapter 2260 Controls: Contractor's claims for breach of this Contract that are not resolved informally are governed by Texas Government Code, Chapter 2260, as it may be amended from time to time, unless preempted by other applicable law. The submission, processing and resolution of Contractor's claims are governed by rules adopted by the Texas Attorney General at 1 Tex. Admin. Code, Chapter 68, as currently effective or subsequently amended.

13.0 Insurance/Bonding Requirements

13.1 The Contractor shall not commence work under this Contract until it has obtained all the insurance required under this paragraph and such insurance has been approved by the CCRMA. If the policies are "claims-made" policies, then the policies must provide a retroactive date which must be on or before the execution date of the Contract and the extended reporting period may not be less than five (5) years following the completion date of the Contract. The Contractor shall provide to the CCRMA with current certificate(s)/endorsement(s) evidencing the insurance coverage referenced below. Such certificates shall indicate that policies will not be reduced or canceled without at least thirty (30) days advance written notice to the CCRMA. The required insurance must be written by a company licensed to do business in the State of Texas at the time the policy is issued. The insurance company shall be acceptable to the CCRMA and said insurance companies must have a rating in the current Best's of at least AXIII. Failure to maintain the required insurance coverage, including naming the CCRMA as an "additional insured" during the term of the Contract shall constitute a material breach thereof. The Contractor shall maintain the insurance coverage during the term of the Contract and shall name the CCRMA as an "additional insured" on the following insurance coverage:

13.2 **Workers Compensation Insurance.** The Contractor shall procure, and shall maintain during the life of this Contract, Workers Compensation Insurance in an amount not less than the statutory requirement and with no pre-set limits. A waiver of subrogation endorsement in favor of the CCRMA must be included in the policy. By signing the

Contract, the Contractor certifies compliance with all applicable laws, rules, and regulations pertaining to workers compensation insurance. This certification includes all subcontractors.

13.3 Commercial General Liability Insurance. An original certificate evidencing Commercial General Liability coverage, naming the CCRMA as an additional insured, together with the appropriate endorsement to said policy reflecting the addition of the CCRMA as an additional insured under said policy (combined single limit of not less than ONE MILLION AND NO/100 DOLLARS ($1,000,000.00) for bodily injury and property damage and THREE MILLION AND NO/100 DOLLARS ($3,000,000.00) in the aggregate).

13.4 Business Automobile Liability Insurance. Such coverage shall be a combined single limit of not less than ONE MILLION AND NO/100 DOLLARS ($1,000,000.00) for bodily injury and property damage.

13.5 Umbrella Liability. Such coverage shall not be less than ONE MILLION AND NO/100 DOLLARS ($1,000,000.00) per occurrence or in the aggregate.

13.6 The Contractor shall furnish a Payment Bond in an amount at least equal to the Contract Price, as security for the faithful performance and payment of all the Contractor's obligations to perform the Work under the Contract Documents. These Bonds shall remain in effect at least one year after the date when final payment becomes due, except as provided otherwise by Laws or Regulations or by the Contract Documents.

The Payment Bond shall be in a form approved by the Authority except as provided otherwise by Laws or Regulations, and shall be executed by such surety as authorized to do business in the State of Texas and named in the current list of "Companies Holding Certificates of Authority as Acceptable Sureties on Federal Bonds and as Acceptable Reinsuring Companies" as published in Circular 570 (amended) by the Financial Management Service, Surety Bonds Branch, U.S. Department of the Treasury. Any Bond signed by an agent must be accompanied by a certified copy of such agent's authority to act.

If the surety on any Bond furnished by the Contractor is declared bankrupt or becomes insolvent or its right to do business is terminated in the State of Texas, or it ceases to meet the requirements herein, the Contractor shall within 20 days thereafter substitute another Bond and surety, both of which shall comply with the provisions herein.

14.0 Miscellaneous

14.1 Job Order Contracting Program Development. The contractor agrees to educate CCRMA employees in JOC Program Management and RS Means Job Cost Estimating. Contractor agrees to provide to the CCRMA annually, while this Contract is in effect, two (2) RS Means CostWorks estimating programs, with training on RS Means estimating and unit pricing.

14.2 Hard Costs Analysis. Contractor shall provide a hard cost analysis for this project with RS Means Estimate submitted for review and consideration of the Job Order Contracting Team. Attached herein as Exhibit 2. All CCRMA Job Order Contracting Program projects, at the discretion of CCRMA, are subject to a hard job costs analysis in an open book audit by the CCRMA Authorized Representative. Any project ending profit and overhead that is deemed to be in excess of the allowable profit and overhead as set forth in the RS Means unit pricing book for this Contract, shall be credited back to the CCRMA by way of deductive change order and or at the discretion of the CCRMA, as recognized project betterment. Any anticipated excess profit and overhead shall be identified and reported on by the Contractor as soon as such determination is made during the course of the Project completion.

14.3 Construction Photography & Videos. Contractor shall keep daily Project progress digital photos produced by a competent photographer and provide written explanation of the photos in a monthly project progress report and deliver the same to the CCRMA's Authorized Representative. The Contractor is responsible to develop a photo documentation plan for the Project, if required and as directed by the CCRMA's Authorized Representative. CCRMA's Authorized Representative may request photos documentation be sent to him/her at any time. Contractor shall have 48 hours or as agreed upon to respond to all separate request for photo documentation.

14.4 Preconstruction Conference. A preconstruction conference shall be held as soon after the award and execution of the Contract as possible and before any Work at the site is started. The conference will be held at a location selected by the CCRMA's Authorized Representative. The CCRMA's Construction Manager along with the Contractor shall prepare and distribute the meeting agenda, preside over the conference, and may distribute meeting minutes. The conference shall be attended by:

- Contractor's Construction Manager.
- Contractor's Superintendent.
- Any Subcontractors' and/or Suppliers' representatives whom the Contractor may desire to invite or whom the Engineer/Architect or CCRMA may request to attend.
- Engineer/Architect's representative.

14.5 Project Meetings: The Contractor, or his authorized representative(s), shall attend all Project related meetings as indicated herein. The Contractor's representatives, as a minimum, shall include its Project Manager and Superintendent. The Contractor shall provide all pertinent reports, copies of reports, etc., for each meeting as may be required by this or other sections of the Contract.

14.6 Construction Job Site Diaries: The Contractor shall prepare a daily construction diary recording as a minimum the following information concerning events at the site and submit duplicate copies to the CCRMA's Authorized Representative at weekly intervals. The

copies are to be signed by the project Superintendent and Project Manager and include the following information.

- Work performed;
- Approximate count of Contractor's personnel, by classification, on the site;
- List of all Subcontractors, personnel and any professionals on the site that day;
- List of all equipment on the site by make and model;
- High and low temperatures together with general weather conditions;
- Start time and finish time of day's work;
- Accidents and / or unusual events;
- Meetings and significant decisions made;
- Stoppages, delays, shortages and / or losses;
- Meter readings and / or similar recordings;
- Emergencies procedures that may have been needed;
- Orders and requests of governing authorities;
- Change Orders received and implemented;
- Services connected and / or disconnected;
- Installed equipment and / or system tests and / or startups and results;
- Partial completions and / or occupancies; and
- Date of substantial completion certified.

14.7 Submittals. The Contractor shall provide submittals based on the Contractor's Proposal. Drawings and general provisions of the Contract, including: Division 1 requirements and Cameron County Technical Specifications and Special Provisions thereto, should be used as the related documents for this requirement. For each JOC Project a specific submittal requirement list shall be formed and shall at minimum be inclusive of the following:

1. Project Specific Security plan.
2. Project Specific Safety Plan
3. Contractor's Construction Schedule.
4. Contractors Sequencing Plan
5. Submittal Schedule.
6. Shop drawings.
7. Product Data and MSDS
8. Materials Samples.
9. Project Technical Submittal Requirements
10. Quality assurance and quality control plan and submittals, including any required calculations, mix designs and substantiating test results.

14.8 Administrative Submittals. Refer to other Division 1 Sections and other Contract Documents for requirements for administrative submittals. Such submittals include, but are not limited to, the following:

1. Applications for Payment.
2. Payment Bond.
3. Insurance certificates.
4. Monthly Subcontractors activity and expense report.
5. Non-use of asbestos affidavits

14.9 Construction and Demolition Waste Management. The CCRMA has established that all JOC Projects shall minimize the creation of construction and demolition waste on the Project site and shall recycle and/or salvage non-hazardous construction, demolition, and land clearing debris to divert waste from Landfills.

- Contractor shall minimize factors that contribute to waste such as over packaging, improper storage, ordering error, poor planning, breakage, mishandling, and contamination.
- Contractor shall reuse, salvage, or recycle as many of the non-hazardous waste materials as economically feasible.
- With written approval from the CCRMA's Authorized Representative, as an incentive to encourage resourcefulness, all profits resulting from salvaging and recycling shall go to the Contractor.
- In cases where there is little to no cost difference between recycling/salvaging and land-filling of items not required to be recycled or salvaged, the Contractor is directed to recycle/salvage.
- Hazardous materials are an exception to this Section. Comply with applicable requirements of Local, State and Federal regulations.
- Draft Waste Management Plan: Within 14 calendar days after date of the Notice to proceed, or prior to any waste removal, whichever occurs first, submit a draft Waste Management Plan outlining how demolished items and waste material will be removed from the Project Site.

14.10 Project Specific Management Plans and Lists. Pending the JOC Projects size and scale of difficulty, at the sole discretion of the CCRMA's Representative, Engineers/Architects, and/or Project Mangers, the Contractor shall provide the following, but not limited to, if requested within 14 days of request being made.

- Storm water Pollution Prevention Plan (SWPP)
- Hazardous Materials Handling Plans
- Sustainable Construction Requirements
- Construction Indoor Air Quality Management Plan

- Public Safety and Convenience Plan
- Wage Rates and Payroll Reporting
- Project Materials and Equipment List
- Development of MBE/ WBE Procurement Program
- General and Project Specific Safety Plans
- Project Closeout and Commissioning Documentation

14.11 Confidentiality. The Contractor shall treat any CCRMA supplied information or information pertaining to CCRMA's business as confidential and shall not disclose any such information to others except as necessary for the performance of this Contract or as authorized by the CCRMA in writing.

14.12 Illegal Dumping. The Contractor shall ensure that it and all of its Subcontractors and assigns prevent illegal dumping of litter in accordance with Title 5, Texas Health and Safety Code, Chapter 365.

14.13 RESERVED.

14.14 Open Records. All information, documentation and other material submitted by the Contractor may be subject to public disclosure under the Public Information Act, Texas Government Code Chapter 552.

14.15 Family Code Child Support Certification. Pursuant to Section 231.006, *Texas Family Code*, the Contractor certifies that it is not ineligible to receive the award of or payments under this Contract and acknowledges that this Contract may be terminated and payment may be withheld if this certification is inaccurate.

14.16 Franchise Tax Certification: As a limited liability company, Contractor certifies that it is not currently delinquent in the payment of any Franchise Taxes due under Chapter 171 of the *Texas Tax Code*, or that the limited liability company is exempt from the payment of such taxes, or that the limited liability company is an out-of-state limited liability company that is not subject to the Texas Franchise Tax, whichever is applicable.

14.17 Payment of Debt or Delinquency to the State: Pursuant to Sections 2107.008 and 2252.093, *Texas Government Code*, Contractor agrees that any payments owing to Contractor under this Contract may be applied directly toward any debt or delinquency that Contractor owes the State of Texas or any agency of the State of Texas regardless of when it arises, until such debt or delinquency is paid in full.

14.18 Taxes: CCRMA is a tax exempt political subdivision of the State of Texas under Chapter 151, Texas Tax Code and Chapter 3 of Title 34 of the Texas Administrative Code. Contractor shall avail itself of all tax exemptions applicable to Contractor's work or expenses.

14.19 Eligibility Certification: Pursuant to Section 2155.004, *Texas Government Code*, Contractor certifies that the individual or business entity named in this Contract is not

ineligible to receive the award of or payments under this Contract and acknowledges that this Contract may be terminated and payment withheld if this certification is inaccurate.

14.20 Equal Employment Opportunity

A. The Contractor will not discriminate against any employee or the applicant for employment because of race, color, religion, sex, or national origin.
B. The Contractor will cause the foregoing provision to be inserted in all subcontracts for any work covered by this contract so that such provisions will be binding upon each subcontractor, provided that the foregoing provisions shall not apply to contracts or subcontracts for standard commercial supplies or raw materials.
C. Nothing herein provided shall be construed as a limitation upon the application of other laws which establish different standards of compliance or upon the application of requirements for the hiring of local or other area residents.

14.21 Force Majeure. No party shall be liable or responsible to the other for any loss or damage or for any delays or failure to perform under this Contract due to causes beyond its reasonable control, including, but not limited to, acts of God, employee strikes, epidemics, war, riots, flood, fire, sabotage, terrorist acts or any other circumstances of like character.

14.22 Non-Appropriation of Funds. It is specifically understood and agreed, that in the event funds or insufficient funds are appropriated and/or budgeted concerning the obligations under this Contract on behalf of CCRMA, then CCRMA shall notify the Contractor, and this Contract shall thereafter terminate and be null and void on the last day of the fiscal period for which appropriations were made without penalty, liability or expense to CCRMA.

14.23 Financial Interest. By signature hereon, Contractor certifies that no member of the Cameron County Commissioners Court or Board Member of the Cameron County Regional Mobility Authority, including component institutions, has a financial interest, directly or indirectly, in the transaction that is the subject of this contract.

14.24 Independent Contractor: Contractor acknowledges that it is engaged as an independent contractor and that CCRMA shall have no responsibility to provide Contractor or its employees with transportation, insurance or other fringe benefits normally associated with employee status. Contractor is responsible for all income taxes required by applicable law. Moreover, nothing herein shall create any association, agency, partnership or joint venture between the parties hereto and neither shall have any authority to bind the other in any way.

14.25 Authority to Act: Contractor warrants, represents, and agrees that (1) it is duly organized, validly existing limited liability company that is in good standing under the laws of the state of its incorporation or organization; (2) it is duly authorized and in good standing to conduct business in the State of Texas; (3) it has all necessary power and has received all necessary approvals to execute and deliver this Contract; and (4) the individual executing

this Contract on behalf of Contractor has been duly authorized to act for and bind Contractor.

14.26 Records. Records of expenses pertaining to additional services, services performed on the basis of a Worker Wage Rate or Monthly Salary Rate, or reimbursable expense, if allowed, shall be kept on the basis of generally accepted accounting principles and in accordance with cost accounting standards promulgated by the Federal Office of Management and Budget Cost Accounting Standards Board and shall be available for audit by the CCRMA or the CCRMA's authorized representative on reasonable notice. These records will be maintained and retained by the Contractor for a period of seven (7) years after the Contract expiration or until all audit, claim, and litigation matters are resolved, whichever is later.

14.27 Captions. The captions of paragraphs in this Contract are for convenience only and shall not be considered or referred to in resolving questions of interpretation or construction.

14.28 Successors and Assigns. The CCRMA and the Contractor, respectively, bind themselves, their partners, successors, assigns and legal representatives to the other party to the terms and conditions of this Contract. This Contract is a personal service contract for the services of Contractor, and Contractor's interest in this Contract, duties hereunder and/or fees due hereunder may not be assigned or delegated to a third party without written consent of CCRMA. THE CONTRACTOR EXPRESSLY AGREES THAT: (1) NO PASS-THRU AGREEMENTS, OR SIMILAR AGREEMENTS, BETWEEN THE CONTRACTOR AND ANY THIRD PARTY SHALL BE ENFORCEABLE AGAINST THE CCRMA; AND, (2) THE CCRMA RETAINS ITS GOVERNMENTAL

14.29 IN ALL RESPECTS UNDER THIS CONTRACT AND ANY PASS-THRU AGREEMENTS OR SIMILAR AGREEMENTS AS NO PROVISION IN THIS CONTRACT IS IN ANY WAY INTENDED TO CONSTITUTE A WAIVER BY THE CCRMA OF ANY IMMUNITES FROM SUIT OR FROM LIABILITY THAT THE CCRMA MAY HAVE BY OPERATION OF LAW. The benefits and burdens of this Contract are, however, assignable by CCRMA in its sole and absolute discretion.

14.30 Waivers. No delay or omission by either party in exercising any right or power provided under the provisions of this Contract shall impair any such right or power or be construed to be a waiver of the right or power. A written waiver granted by either of the parties of any provision of this Contract shall not be construed as a future waiver of that provision or a waiver of any other provision of the Contract.

14.30 Assignment or Novation. The Contractor shall not assign or transfer, whether by an assignment or novation, any of its rights, duties, benefits, obligations, liabilities, or responsibilities under this Contract without the written consent of the County; provided, however, that assignments to banks or other financial institutions may be made without the consent of the CCRMA. No assignment or novation of this Contract shall be valid unless the assignment or novation expressly provides that the assignment of any of the Contractors rights or benefits under the Contract is subject to a prior lien for labor performed, services rendered, and materials, tools, and equipment supplied for the performance of the work

under this Contract in favor of all persons, firms, or corporations rendering such labor or services or supplying such materials, tools, or equipment.

14.31 Entire Agreement. This Contract constitutes the sole and only agreement between the parties with respect to the services contracted for and supersedes any prior understandings, written or oral. No modification, alteration or waiver of this Contract or any of its provisions shall be effective unless in writing and signed by both parties. No course of prior dealings, no usage of trade, and no course of performance shall be used to modify, supplement or explain any terms used in this Contract.

14.32 Severability. Should any provisions(s) of this Contract be held invalid or unenforceable in any respect, that provision shall not affect any other provisions and this Contract shall be construed as if the invalid or unenforceable provision(s) had not been included.

14.33 Governing Law and Venue. THIS CONTRACT SHALL BE CONSTRUED, INTERPRETED AND APPLIED IN ACCORDANCE WITH THE LAWS OF THE STATE OF TEXAS WITHOUT REGARD FOR CHOICE OF LAW PRINCIPLES. VENUE FOR ANY CAUSE OF ACTION ARISING OUT OF OR RELATED TO THIS CONTRACT SHALL BE EXCLUSIVELY IN THE STATE AND FEDERAL COURTS OF CAMERON COUNTY, TEXAS. ANY ALTERATIONS, ADDITIONS, OR DELETIONS TO THE TERMS OF THE CONTRACT THAT ARE REQUIRED BY CHANGES IN FEDERAL OR STATE LAW OR REGULATIONS ARE AUTOMATICALLY INCORPORATED INTO THE CONTRACT WITHOUT WRITTEN AMENDMENT HERETO AND SHALL BECOME EFFECTIVE ON THE DATE DESIGNATED BY SUCH LAW OR BY SUCH REGULATION.

14.34 RIGHTS AND REMEDIES: Duties and obligations imposed by the Contract Documents and rights and remedies available thereunder shall be in addition to and not a limitation of duties, obligations, rights, and remedies otherwise imposed or available by law.. No action or failure to act by the CCRMA or Architect or Contractor shall constitute a waiver of a right or duty afforded them under the Contract, nor shall such act or failure to act constitute approval of or acquiescence in a breach thereunder, except as may be specifically agreed in writing.

IN THE EVENT OF A QUESTION AS TO THE INTERPRETATION OF ANY PROVISION OF THIS CONTRACT, THE PROVISION SHALL NOT BE CONSTRUED AGAINST THE DRAFTING PARTY. THIS INCLUDES BUT IS NOT LIMITED TO THE CONTRACTOR'S AGREEMENT THAT SECTION 15, AND ANY OTHER CLAUSE HEREIN, SHALL IN NO EVENT BE STRICTLY CONSTRUED AGAINST THE CCRMA.

14.35 Termination. The CCRMA may terminate this Contract for convenience or for the Contractor's default at any time prior to the expiration of the Contract by delivering written

notice to the Contractor in accordance with this Agreement. Termination shall be effective upon the earlier to occur of the date specified in the written notice to the Contractor or thirty (30) days from delivery of the written notice.

15.0 Indemnity. This provision shall survive any expiration or termination of the Contract.

15.1 THE CONTRACTOR RELEASES THE CCRMA FROM AND AGREES TO INDEMNIFY, DEFEND, AND HOLD THE CCRMA (AND ITS DIRECTORS, OFFICERS, EMPLOYEES, AND AGENTS) HARMLESS FROM AND AGAINST ANY AND ALL CLAIMS, DEMANDS, DAMAGES, LOSSES, SUITS, ACTIONS, DECREES, JUDGMENTS, ATTORNEY'S FEES, COURT COSTS, AND OTHER EXPENSES OF ANY KIND OR CHARACTER FOR DEFENDING THE CLAIMS AND DEMANDS, WHICH ARE CAUSED BY, ARISE OUT OF, OR OCCUR DUE TO ANY FAILURE OF THE CONTRACTOR TO PERFORM THE OBLIGATIONS REQUIRED BY THE CONTRACT AS WELL AS FEDERAL, TEXAS, OR OTHER APPLICABLE LAW, INCLUDING BUT NOT LIMITED TO CLAIMS OR DEMANDS BASED ON THE NEGLIGENCE, GROSS NEGLIGENCE, OR OTHER ACTIONS OR INACTIONS OF THE CONTRACTOR, OR THE CONTRACTOR'S AGENTS, EMPLOYEES, SUBCONTRACTORS, OR OTHER THIRD PARTIES. THE CONTRACTOR HEREBY WAIVES ANY RIGHT TO DEFEND AGAINST THE ENFORCEABILITY OF THIS INDEMNIFICATION PROVISION AND EXPRESSLY AGREES THAT THIS PROVISION MEETS ALL LEGAL REQUIREMENTS AND IS LEGALLY ENFORCEABLE AGAINST THE CONTRACTOR.

15.2 In this connection, it is expressly agreed that the Contractor shall, at its own expense, defend the CCRMA, its directors, officers, employees, and agents, against any and all claims, suits or actions which may be brought against them, or any of them, as a result of, or by reason of, or arising out of, or on account of, or in consequence of any act or failure to act of the Contractor the consequences of which the Contractor has indemnified the CCRMA. If the Contractor shall fail to do so, the CCRMA shall have the right, but not the obligation, to defend the same and to charge all direct and incidental costs of such defense to the Contractor including attorney's fees and court costs.

15.3 The Contractor shall provide that any contractual arrangement with a subcontractor shall be in conformance with the terms of the Contract including the terms of this indemnity provision. The Contractor guarantees that it will promptly handle and rectify any and all claims for materials, supplies and labor, or any other claims that may be made against it or any of its subcontractors in connection with the contract.

15.4 THE CONTRACTOR RELEASES THE CCRMA FROM AND AGREES TO INDEMNIFY, DEFEND, AND HOLD THE CCRMA (AND ITS DIRECTORS, OFFICERS, EMPLOYEES, AND AGENTS) HARMLESS FROM AND AGAINST ANY AND ALL CLAIMS, DEMANDS, DAMAGES, LOSSES, SUITS, ACTIONS,

DECREES, JUDGMENTS, ATTORNEY'S FEES, COURT COSTS, AND OTHER EXPENSES OF ANY KIND OR CHARACTER FOR DEFENDING THE CLAIMS AND DEMANDS BASED ON THE NEGLIGENCE, GROSS NEGLIGENCE, OR OTHER ACTIONS OR INACTIONS OF THE CCRMA, OR THE CCRMA'S AGENTS, EMPLOYEES, OR OTHER THIRD PARTIES. THE CONTRACTOR HEREBY WAIVES ANY RIGHT TO DEFEND AGAINST THE ENFORCEABILITY OF THIS INDEMNIFICATION PROVISION AND EXPRESSLY AGREES THAT THIS PROVISION MEETS ALL LEGAL REQUIREMENTS AND IS LEGALLY ENFORCEABLE AGAINST THE CONTRACTOR.

16.0. Exhibits

16.1 The following noted documents are a part of this Contract:

16.1.1 Exhibit 1. The Contractor's Proposal

16.1.2 Exhibit 2. The Contractor's Hard Cost Analysis with RS Means Estimate

16.2 TO THE EXTENT THAT ANY PROVISIONS OF THIS CONTRACT CONFLICT WITH THE PROVISIONS OF THE EXHIBITS, THE MORE FAVORABLE PROVISION TO THE CCRMA SHALL CONTROL.

17.0 Notices

17.1 All notices, consents, approvals, demands, requests or other binding communications under this Contract shall be in writing. Written notice may delivered in person to the designated representative of the Contractor or CCRMA; mailed by U. S. mail to the last known business address of the designated representative; or transmitted by fax machine to the last known business fax number of the designated representative. Mail notices are deemed effective three business days after the date of mailing. Fax notices are deemed effective the next business day after faxing.

17.2 The initially designated representatives of the parties for receipt of notices are as follows. Either party may change their designated representative for receipt of notices by written notice.

(a) If to CCRMA: Mr. Pete Sepulveda, CCRMA Executive Director
3461 Carmen Ave.
Rancho Viejo, Texas 78575
Phone: 956.621.5571
Fax: 956.621.5590

(b) With Copies to: Frank Parker, Jr., Chairman
3461 Carmen Ave.
Rancho Viejo, Texas 78575
Phone: 956.621.5571
Fax: 956.621.5590

(c) If to Contractor: Spaw Glass Contractors, Inc.
3008 W. Spur 54
Harlingen, Texas 78552
Attn: Sam Saldana
Samuel.saldana@spawglass.com
956.412.9880

(*Signature Page to Follow*)

Spaw Glass Contractors, Inc

By: _____

Printed Name: David Ajlani

Title: President, South Texas Region

Date: 6/4/2025

Cameron County Regional Mobility Authority

By: _____

Frank Parker, Chairman of the Board

Date: 05/29/2025

2-K CONSIDERATION AND APPROVAL OF A SCOPE OF WORK WITH HARRIS COUNTY TOLL ROAD AUTHORITY FOR CCRMA MANAGEMENT OF FUEGO TAG INVENTORY AND ACCESS TO ODOO SYSTEM WAREHOUSE.

Project Scope Document – DRAFT V1.2

Project Title: Enable CCRMA to Manage their Fuego Tag Inventory and Warehouse in Odoo

A Project proposed by Harris County Toll Road Authority (HCTRA) for the benefit of Cameron County Regional Mobility Authority (CCRMA)

Table of Contents

Project Background & Purpose 1
Project Justification 2
Project Objectives 2
Project Description 2
Scope of Work 3
In Scope 3
Out of Scope 3
Initial Project Timeline 3
Dependencies: 4
Success Criteria 4
Level of Effort Estimate 4
Funding: 5
Notes: 5
Accepted for CCRMA by:_____ 5

Project Background & Purpose

Currently, CCRMA must rely on HCTRA to conduct all tag inventory management activities within the Odoo platform. This project proposes an enhancement to Odoo that will enable CCRMA to independently manage their own Fuego tag inventory and warehouse. The project

introduces role-based access control and enhanced user functionality to meet CCRMA's operational needs.

Project Justification

This project fulfills a CCRMA request for operational autonomy, aligns with strategic partner enablement goals, and lays the groundwork for scalable multi-agency warehouse management in Odoo. Long-term ROI includes reduced administrative overhead and improved responsiveness to partner needs.

Project Objectives

- Enable CCRMA users to independently manage their tag inventory within Odoo.
- Implement role-based access to restrict warehouse and inventory actions by user type.
- Allow future scalability for additional agency warehouse management.
- Establish support processes and documentation for CCRMA engagement.

Project Description

Currently, Odoo users can either see all tags in the HCTRA inventory or none at all. In order to facilitate this request from CCRMA, a change in the Odoo system is required to include role-based access control in Odoo to restrict warehouse/stock location visibility based on user roles. It will be required that two user types be created versus the single one today:

1) "CCRMA Warehouse Users" would have the ability to:
    a. See and assign CCRMA tags only.
    b. Assign CCRMA tags after the manifest file is loaded
    c. Access to tags in the CCRMA warehouse only.
    d. Move tags from one CCRMA CSR to another.
    e. Make automated moves from CSRs to locations
        i. However, once assigned to partner locations or customers, changes would need to be made by an enterprise user

2) "Enterprise Users" would have the ability to:
    a. Have all the capabilities of Warehouse users.
    b. Be able to view and assign both CCRMA and HCTRA tags.

c. Access the CCRMA warehouse so may assist if CCRMA has any issues.

d. Full access and current functionality across the HCTRA inventory.

e. Would still load manifest files.

Scope of Work

In Scope

- Design and development of role-based access in Odoo.
- Creation of two new user roles:
  - Warehouse Users
  - Enterprise Users
- Loading and assigning of manifest files by authorized users.
- Setup and configuration of CCRMA warehouse within Odoo.
- Internal QA, UAT, and production deployment.
- Support procedures and documentation.
- Reporting and progress updates via weekly CCRMA-HCTRA meetings.

Out of Scope

- Changes to physical infrastructure.
- Support for agencies outside of CCRMA (future scalability only).

Initial Project Timeline

Milestone	Estimated Timing
CCRMA Scope Approval (this document)	Week 1
PIF Approval	Weeks 2-3
Finalize Requirements, Design & Project Plan*	Week 4
Development	TBD
Internal QA	TBD
UAT	
Deployment to Production	
Hypercare	

*The current estimate is that the project would take 9-10 weeks from when the PIF is approved and a P.O. Published

Dependencies:

- The HCTRA Odoo upgrade to V17 is a dependency; for the UAT Environment prior to UAT testing and in Production before this enhancement can go live. The V17 upgrade is planned for mid-2025, exact date TBD.

Success Criteria

- CCRMA users have independent access to manage tag inventory in Odoo
- All testing passed and sign-off received by CCRMA
- System performs as documented with no critical post-deployment issues
- Support processes in place and communicated to CCRMA

Level of Effort Estimate

Task	Hours	Comments
Scope Analysis	0	Business Analyst(BA), Dev Lead, Proj. Mgr
BSA (Write Up)	16	BA, Arch., Developer, Proj. Mgr
Odoo New Features Design/Dev/Unit Testing/Code Review/Demo/Code Delivery	80	BA, Arch., Developer, Proj. Mgr
Data Setup	40	QA Tester
QA Env - TC, Testing and Retest for any defects	64	QA Tester, Developer
Regression testing	16	QA Tester
UAT Env - Testing and retest (if applicable)	40	BA, QA Tester
Release Management	24	Developer, Project Manager
Lead Support & Co-ordination	24	Project Manager
As-built updates	4	Developer, QA Tester

TOTAL	**308**	**Total = $48,860**

Funding:

To be provided by HCTRA, a specific funding CIP has not yet been identified

Notes:

N/A

Accepted for CCRMA by: _____

Frank Parker, Jr., Chairman

2-L CONSIDERATION AND APPROVAL OF AMENDMENT NO. 2 TO PROFESSIONAL ENGINEERING CONSULTING SERVICES AGREEMENT BETWEEN THE CAMERON COUNTY REGIONAL MOBILITY AUTHORITY AND JWH & ASSOCIATES FOR ENGINEERING SERVICES RELATING TO THE UPDATE OF THE FM 511 ROADWAY ANALYSIS.

JWH & Associates, Inc.

3014 Fairway Drive Sugar Land, Texas 77478
956.793.3870 Cell Phone jhudson8@comcast.net Email

May 21, 2025

Mr. Pete Sepulveda
Executive Director
Cameron County Regional Mobility Authority
3461 Carmen Ave., Suite 5
Rancho Viejo, Texas 78575

Re: Request for an Amendment #2 on Professional Engineering Consulting Services Agreement for the Engineering services relating to the update of the FM 511 roadway analysis.

Dear Mr. Sepulveda,

I am requesting Amendment number 2 for additional funding for the FM 511 traffic analysis study. Such amendment is requested based on additional information obtained and needed to be included within analysis for the study. Such analysis includes development of cost estimates for three phases of the recommendations, and the development of drawings of the existing and recommended right-of-way drawings on FM 511 based recently obtained information provided during the recent Texas Department of Transportation. The analysis includes further information of crashes along the three segments of FM 511 with monetized values calculated for each segment. New information is to be included within the analysis regarding the Brownsville/South Padre Airport runway extension, its runway clearance zones and the

impact to the adjacent roadway system . The analysis of these items is critical for the report and will impact the recommendations.

I am requesting an additional funding of **$8,901.25** based on the estimated work involved. A spreadsheet is attached reflected the distribution of the fees. The work will be done within the time frame of the contract.

Authorization

The ENGINEER shall be authorized to continue with the proposed services for the PROJECT upon execution of this agreement.

If to the ENGINEER:

JWH AND ASSOCIATES, INC.
3014 Fairway Drive
Sugar Land, Texas 77478
Attention: John W. Hudson, Jr., P. E.
Phone: 956-793-3870
E-mail jhudson8@comcast.net

By

John W. Hudson, Jr.

Date: May 20, 2025

If to the OWNER:

Cameron County Regional Mobility Authority

Approved

By: _____

Title: Chairman

Date: 05/29/2025

Exhibit A

JWH and Associates, Inc.
Billing Rate Table

Staff

Classifications	Billing Rate
Principal- John Hudson	$275.00
Engineer Associate- Dustin Qualls	$150.00
CADD Technician	$100.00
Administrative Assistant	$80.00
Assistant	$50.00

Reimbursable Expenses Billing Rate

Parking	Actual cost
Printing	Actual cost
Mileage	65.5 Cents/mile
Airfare	Actual cost
Rent Car	Actual cost
Lodging	Actual cost
Means (per diem)	$60.00/day
Subcontract services	Actual cost + 10%

EXHIBIT A

Project Cost Estimate

Scope Proposal by J W H & Assoc., Inc

Project: Update of the FM 511 Report Transportation Analysis

Date: May 20, 2025 Cameron County

Request for funding for amendment #2

Client: Cameron County Regional Mobility Authority

Cost Estimate for Amendment #2

	Principal	Engr. Ass't.	CADD	Admin. Asst.	Sub-Contract			Total	Total cost
Hourly Rate	$275.00	$150.00	$100.00	$80.00	$1,000			Man hours	
	Man hours	Man hours	Man hours	Man hours					
Task 1: Project preparation for Kickoff meeting								0	$ -
Task 2: Field surveys, photos, land use inventory, drone flights								0	$ -
Task 3: Collection of traffic volumes, future data from City of Brownsville								0	$ -
Task 4: Turning movement counts - 6 locations-subcontracted								0	$ -
Task 5: Reseach existing right-of-way , drawings on aerials								0	$ -
Task 6: Special wide and long loads analysis - autocad turn analysis								0	$ -
Task 7: Plan improvements, cad drawings								0	$ -
Task 8: Capacity Analysis at 4 intersections								0	$ -
Task 9: Develop Report of finding and Power point presentation								0	$ -
Task 10: Presentations								0	$ -
Added items, cost estimates, powerpoint development, Crash analysis	24		4	18				46	$ 8,040.00
Presetnation to Texas Department of Transportation									
Total	24	0	4	18	0	0	0	46	$8,040.00

Expenses	Unit Cost	No.	Unit	Total	
Mileage	$0.66	750	miles	$491.25	
Per diem (meals)	$60.00	2	Days	$120.00	4
Airfare	$500.00	0	Rd. trip	$0.00	
Parking	$40.00	0	Days	$0.00	
Rent car	$75.00	0	Days	$0.00	
Lodging	$125.00	2	Days	$250.00	
Rent car fuel	$20.00	0	Each	$0.00	
Printing/reproductions	$150.00	0	Lump sum	$0.00	
Total Expense cost				$861.25	
Total Project Cost Estimate					$8,901.25

2-M CONSIDERATION AND APPROVAL OF CHANGE ORDER NO. 1 TO THE CONSTRUCTION CONTRACT BETWEEN THE CAMERON COUNTY REGIONAL MOBILITY AUTHORITY AND ZIWA CORPORATION FOR THE LOS INDIOS LAND PORT OF ENTRY EXPORT DOCK RENOVATIONS.

05/27/2025

Pete Sepulveda, Jr
Executive Director
Cameron County Regional Mobility Authority

RE: Recommendation of Approval Change Order No. 1

Dear Mr. Sepulveda,

The purpose of this letter is to provide a recommendation for approval of the scope of work called for by the attached change order No. 1 supporting documentation for the Los Indios POE Dock Renovation project. The work is to maintain the fire rating of window 5 with the installation of an Amplified Window Intercom System. A credit has been provided for the Augmenters replaced by the Alpha Comm SC-3oo units. The request for 35 working days has been added to this change order.

If you have any questions, please call me or RRP at (956) 926-5000 or via e-mail at ppawelek@rrpeng.com.

Sincerely,

Phillip J. Pawelek, P.E

Phillip J. Pawelek, PE
Project Manager

Attachments

RMA
CAMERON COUNTY REGIONAL MOBILITY AUTHORITY

CONSTRUCTION CONTRACT CHANGE ORDER NUMBER: 1

1. CONTRACTOR: Ziwa Corporation

2. Change Order Work Limits: Sta. _____ to Sta. _____

3. Type of Change (on federal-aid non-exempt projects): Minor (Major/Minor)

4. Describe the change and the reason for the change order. When necessary, include exceptions to this agreement.

Provide and complete Install of two (2) Alpha Comm SC-300 Amplified Window Intercom and System. Reason is the addition of Voice Augmenter causes the window to lose its fire rating per manufacturer. A credit for Augmenters and 35 working days are included in this change order.

CCSJ:	
Project:	Los Indios POE Dock Renovation
Highway:	
County:	Cameron
District:	
Contract Number:	2024-003

5. New or revised plan sheet(s) are attached and numbered: Plan sheet A-600 to be revised.

Each signatory hereby warrants that each has the authority to execute this Change Order.

By signing this change order, the contractor agrees to waive any and all claims for additional compensation due to any and all other expenses; additional changes for time, overhead and profit; or loss of compensation as a result of this change. Further, the contractor agrees that this agreement is made in accordance with Item 4 and the Contract. Exceptions should be noted in the response for #5 above.

Ziwa Corporation
THE CONTRACTOR Date 5/23/25

By _____

Typed/Printed Name Jorge de la Garza

Typed/Printed Title G.M.

The following information must be provided

Time Ext. #: 1 Days added on this C.O.: 35

Amt. added by this change order: $5,028.33

For TxDOT use only:

Days participating: _____

Amount participating: _____

Signature _____ Date _____

Name/Title _____

RECOMMENDED FOR EXECUTION:

Name/Title Frank Parker, Jr., Chairman Date

Name/Title Philip J. Pandy, P.E Date 05/27/2025
☑ APPROVED ☐ REQUEST APPROVAL

Name/Title _____ Date

Name/Title _____ Date
☐ APPROVED ☐ REQUEST APPROVAL

Name/Title _____ Date

Name/Title _____ Date
☐ APPROVED ☐ REQUEST APPROVAL

Name/Title _____ Date

Name/Title _____ Date
☐ APPROVED

Engineer's Seal:

	Initials ZIWA	Initials RRP
CCRMA reserves all rights and does not release any claims, known, unknown, related to the cost of this Change Order.	E.M	PJP
RRP certifies that the work described in the Change Order is necessary for completion of the project.	E.M	PJP

RMA
CAMERON COUNTY REGIONAL MOBILITY AUTHORITY

CONSTRUCTION CONTRACT CHANGE ORDER NUMBER: 1

Estimated Cost:

CCSJ:

Paid by Invoice? (☐ Yes ☐ No)

TABLE A: Force Account Work and Materials Placed into Stock

LABOR	HOURLY RATE	EQUIPMENT	HOURLY RATE

TABLE B: Contract Items

Change Order No. 1-Amplified Window Intercom System				ORIGINAL + PREVIOUSLY REVISED		NEW		
ITEM	DESCRIPTION	UNIT	UNIT PRICE	QUANTITY	ITEM COST	QUANTITY	ITEM COST	OVERRUN/ UNDERRUN
	Provide and Complete Installation of Alpha Comm SC-300 (2 each) and System	LS	$6,678.33			1	$6,678.33	$6,678.33
	Credit for Augmenters	LS	$1,650.00	1	$1,650.00	0	$1,650.00	($1,650.00)
TOTALS								$5,028.33